TUBETRACK®

PRODUCT CATALOG

Continuous Tray Support System for Instrumentation and Controls

James C. White Company, Inc. • Greenville, SC

PAGE 3 — ANGLE TRAY

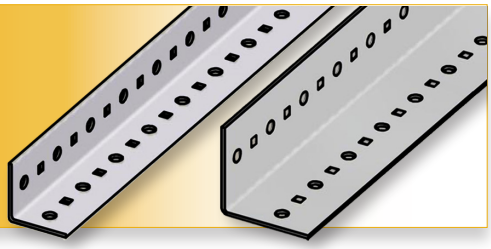

Widths: 2” x 2”, 3” x 3”

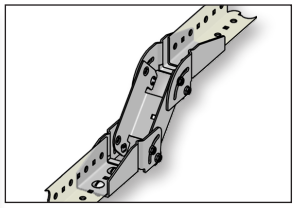

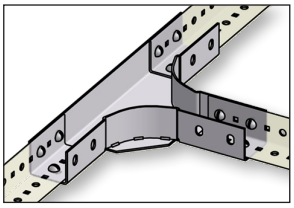

Easy to install, flexible TUBETRACK® Angle Tray system for tubing and bundles.

PAGE 10 — FLAT

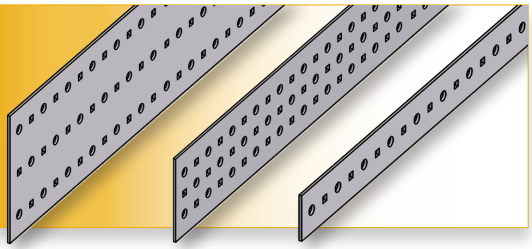

Widths: 2”, 4”, 6”

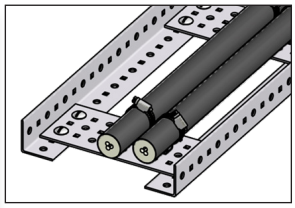

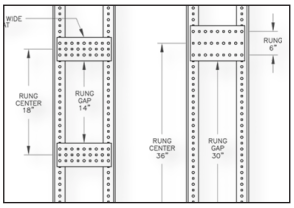

Flexible support option for a variety of uses, including light ladder

PAGE 11 — CHANNEL TRAY 3” DEEP

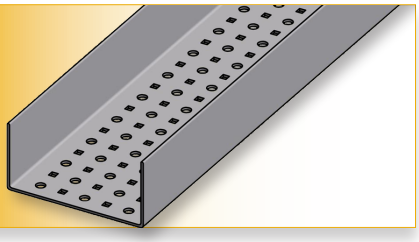

Width: 6”

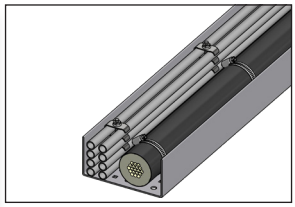

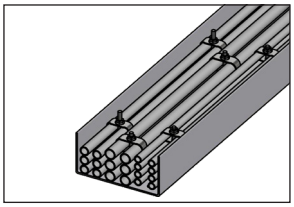

NEW TUBETRACK® 3” deep Channel Tray system for control tubing, cable, and bundles.

PAGE 14 — CHANNEL TRAY 2” DEEP

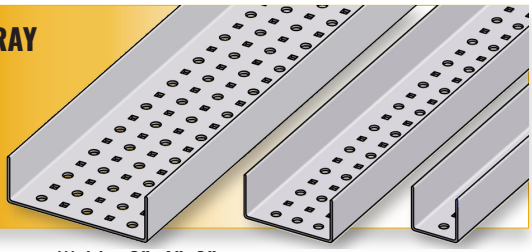

Widths: 2”, 4”, 6”

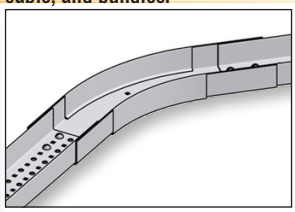

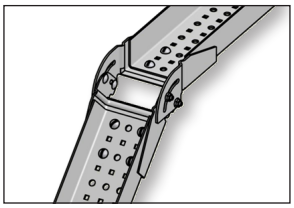

TUBETRACK® 2” deep Channel Tray system for control tubing, cable, and bundles.

PAGE 27 — CHANNEL TRAY 1” DEEP

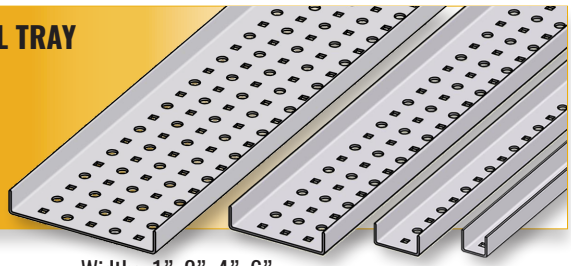

Widths: 1”, 2”, 4”, 6”

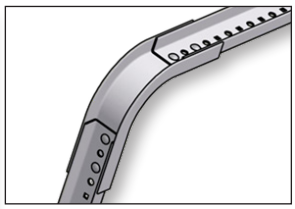

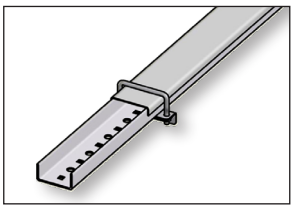

TUBETRACK® 1” deep Channel Tray system with tight radius bends.

PAGE 36 — CLAMPS AND HARDWARE

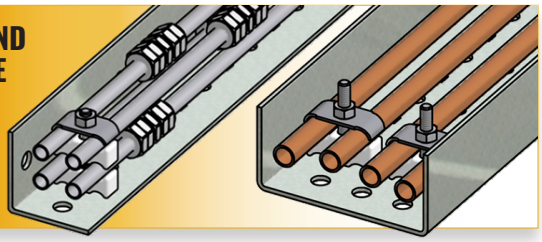

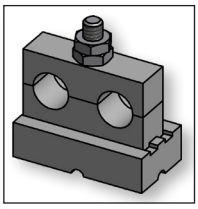

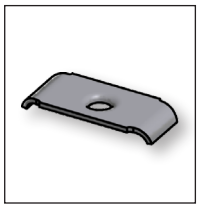

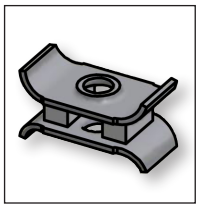

Reliable support for tubes, cables, bundles, hoses, and pipe for all TUBETRACK® tray systems.

About James C. White Company, Inc.

We began as a partnership in 1952 as a distributor of tube fittings and valves. Two years later Jim and Bettye White took the Company to a new level and began manufacturing TUBETRACK®, Jim White's design of the first use of a Tray Support System for instrumentation tubing. The TUBETRACK® Tray System was the first industrial category of Instrument Support Tray.

To this day we have maintained the culture of quality and attention to detail that Jim and Bettye White so deeply ingrained in our personnel. Jim White was well known for many "famous" mottoes he used to guide the company and which he passed on to the current generation of company leadership. One of those mottoes that still directs the company today is:

"Good business is business that is good for both parties."

Under the direction of Tom White, owner and president, we have made significant advances in new product design and manufacturing improvements since 2005. James C. White Co. is a growing, innovative manufacturing company with complete fabrication and machining capabilities. Although a small business, we have served some of the world's largest EPC firms and supplied materials on time to some of the largest industrial projects in the world.

We welcome opportunities to partner with you to solve your special instrumentation support needs. Over the years we have custom machined or fabricated numerous custom products which are not catalog-standard items. If you don't find what you need in our catalogs, please contact the factory. There is a good possibility we may already have a solution or can partner with you to provide one.

Thank you for your continued interest in the James C. White Company.

Quality Assurance Program

- Maintained and advanced for over 40 years
- Designed to conform to applicable requirements of:
  10CFR50 Appendix B, ASME NQA-1a-2009, ASME Boiler and Pressure Vessel Code Section III, Subarticle NCA-3800, MIL-Q-9858A, and MIL-I-45208A
- Controls our manufacturing, inspection, and shipping activities as applicable to your order requirements
- Meets or exceeds various other Q.A. Program requirements, such as ISO
- Routinely audited by various customers and utilities, including NUPIC members

Throughout our TUBETRACK® and CABLE-RACE® catalogs, Hot-Dip Galvanized and Stainless Steel materials marked with a SR symbol can be supplied as Safety-Related for use in nuclear facilities, in accordance with 10CFR50 Appendix B, ASME NQA-1, ASME B&PV Code, Section III NCA-3800 and/or CSA N299.2.

Contact our Nuclear Sales Department regarding availability, load rating, material and part specifications, or to inquire about the possibility of procuring other materials as Safety-Related.

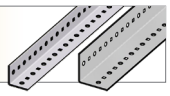

2” and 3” Angle Tray

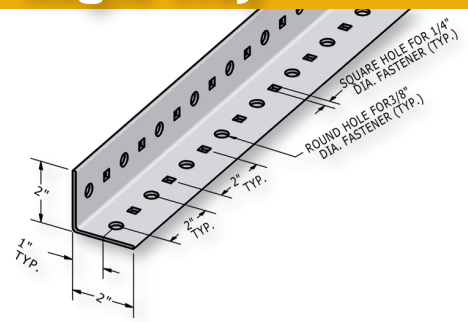

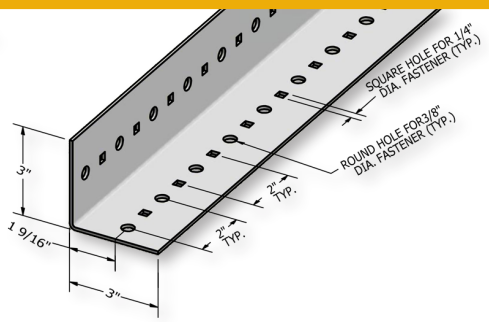

Angle

TUBETRACK® standard angle tray sections are available in 4 corrosion-resistant metals. TUBETRACK® components are factory inspected for quality of fabrication detail, finish, straightness, and appearance.

Angle tray details are shown for standard size, part numbers, materials, widths, lengths, and gages. **Other non-standard gages are available for 304SS and 316SS angle tray but are generally not available from factory stock.**
See page 50 for Load and Deflection information.

NOTE: TUBETRACK® Angle Tray is not UL Classified.

Metal	Width	Angle Tray Part No.*	Angle Gage	Angle Length
Hot-Dip Galvanized Steel	2 3*	A2HD2-GC2 A3HD3-GC2	12	20'
Natural Finish Aluminum	2 3	A2HD2-NA2 A3HD3-NA2	12	20'
Stainless Steel T-304	2 3*	A2HD2-SS2T4-144 A3HD3-SS2T4-144	14	12’
Stainless Steel T-316	2 3	A2HD2-SS2T6-144 A3HD3-SS2T6-144	14	12’

Non-Standard Gages:

Stainless Steel T-304	2	A2H2SS2T4-144-2	12	12’
Stainless Steel T-316	2	A2H2SS2T6-144-2	12	12’

* 3” deep Angle Tray is a new product - may not be immediately available from stock. Contact factory.

Structural connections for 2” and 3” TUBETRACK® angle tray splices and bends are provided with 3/8” dia. bolt sets (truss head bolts with flanged locking nuts). Truss head bolts with hex nuts and flat washers are optional upon request. Bolt sets are supplied with all TUBETRACK® splices and bends.
Standard fastener metals include:

- Zinc-plated bolts with galvanzied fittings
- 18-8 stainless bolts with aluminum fittings
- 18-8 stainless bolts with 304 SS fittings
- 316 stainless bolts with 316 SS fittings

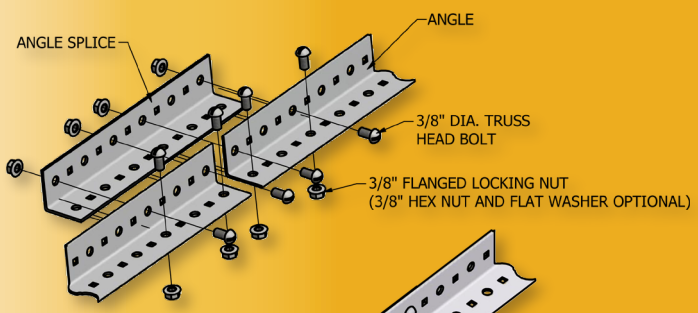

Bolted Connections

TUBETRACK® uses only tightenable fasteners to secure tray connections. Splices bolt through the first and third round holes in each end of a splice, in both angle legs for maximum strength. Bolt sets are supplied with each TUBETRACK® splice and bend. Stainless steel bolting is standard with stainless steel and aluminum TUBETRACK® fittings. Stainless steel bolting is optional with galvanized TUBETRACK® for an additional cost. Contact factory for additional information.

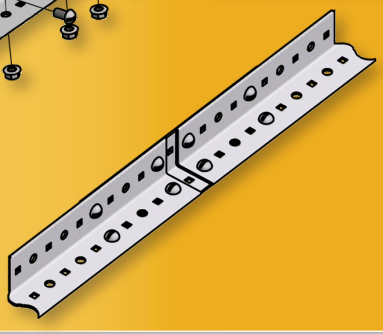

©2021 James C. White Co., Inc. CT2109

Safety-Related options, pg. 2

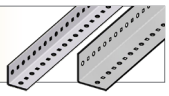

Angle Splice

Includes 3/8" dia. bolting

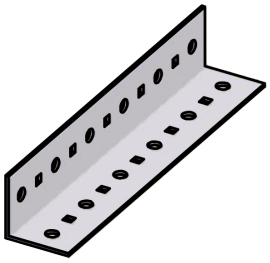

Metal	Width	Part No.*
Hot-Dip Galvanized Steel	2 3*	SA2-GC2 SA3-GC3
Natural Finish Aluminum	2 3	SA2-NA2 SA3-NA3
Stainless Steel T-304	2 3*	SA2-SS2T4 SA3-SS3T4
Stainless Steel T-316	2 3*	SA2-SS2T6 SA3-SS3T6

A: 11.5"
Nominal Engagement: 5.5"
* 3" deep Angle Tray is a new product - may not be available from stock. Contact factory.

SR

Expansion Angle Splice

Includes 3/8" dia. bolting

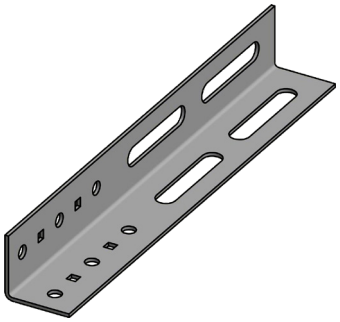

Metal	Width	Part No.*
Hot-Dip Galvanized Steel	2 3*	SA2-GC2-X SA3-GC3-X
Natural Finish Aluminum	2 3*	SA2-NA2-X SA3-NA3-X
Stainless Steel T-304	2 3*	SA2-SS2T4-X SA3-SS3T4-X
Stainless Steel T-316	2 3*	SA2-SS2T6-X SA3-SS3T6-X

A: 14.4"
Nominal Engagement: 5.5"
* 3" deep Angle Tray is a new product - may not be available from stock. Contact factory.

SR

©2021 James C. White Co., Inc. CT2109

Expansion Splice Angle

Allows for longitudinal expansion of up to 2" total movement. Use for thermal expansion, vibration, and at building or frame expansion joints.

Includes 3/8" dia. bolt sets (truss head bolts with flanged locking nuts).

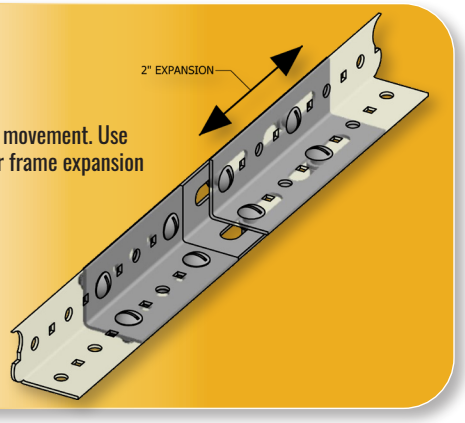

SR Safety-Related options, pg. 2

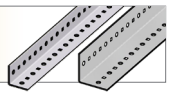

Elbow Inside Angle - 90°
Flat Plate
0-3” Radius

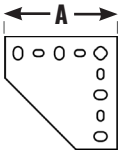

Includes 3/8” dia. bolting

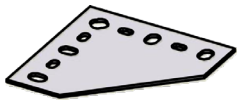

Metal	Part No.
Hot-Dip Galvanized Steel	EIA2-GC-R3D90
Natural Finish Aluminum	EIA2-NA-R3D90
Stainless Steel T-304	EIA2-SS-R3D90T4
Stainless Steel T-316	EIA2-SS-R3D90T6

A: 5.5”
Nominal Engagement: 3.5”
SR

Elbow Inside Angle - 90°
With Flange
0-3” Radius

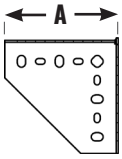

Includes 3/8” dia. bolting

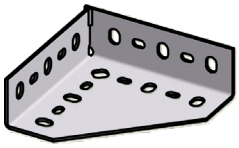

Metal	Part No.
Hot-Dip Galvanized Steel	EIAH2-GC2-R3D90
Natural Finish Aluminum	EIAH2-NA2-R3D90
Stainless Steel T-304	EIAH2 SS2 R3D90T4
Stainless Steel T-316	EIAH2 SS2 R3D90T6

A: 6.0”
Nominal Engagement: 3.5”

Elbow Inside Angle - 45°
Flat Plate
0-3” Radius

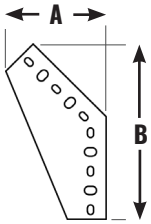

Includes 3/8” dia. bolting

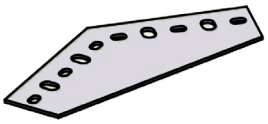

Metal	Part No.
Hot-Dip Galvanized Steel	EIA2-GC-R3D45
Natural Finish Aluminum	EIA2-NA-R3D45
Stainless Steel T-304	EIA2-SS-R3D45T4
Stainless Steel T-316	EIA2-SS-R3D45T6

A: 5.25” **B: 9.0”**
Nominal Engagement: 4.5”
SR

Elbow Inside Angle - 45°
With Flange
0-3” Radius

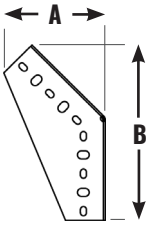

Includes 3/8” dia. bolting

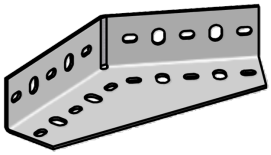

Metal	Part No.
Hot-Dip Galvanized Steel	EIAH2-GC2-R3D45
Natural Finish Aluminum	EIAH2-NA2-R3D45
Stainless Steel T-304	EIAH2 SS2 R3D45T4
Stainless Steel T-316	EIAH2 SS2 R3D45T6

A: 5.25” **B: 9.25”**
Nominal Engagement: 4.5”

SR Safety-Related options, pg. 2

©2021 James C. White Co., Inc. CT2109

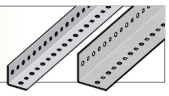

3” Radius Fittings

Elbow Outside Angle - 90°
3” Radius

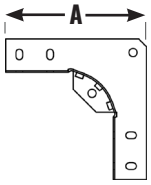

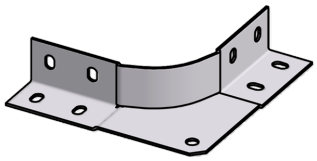

Metal	Part No.
Hot-Dip Galvanized Steel	EOA2-GC2-R3D90
Natural Finish Aluminum	EOA2-NA2-R3D90
Stainless Steel T-304	EOA2-SS2 R3D90T4
Stainless Steel T-316	EOA2-SS2 R3D90T6

A: 9.25”
Nominal Engagement: 3.5”

Includes 3/8” dia. bolting

Elbow Outside Angle - 45°
3” Radius

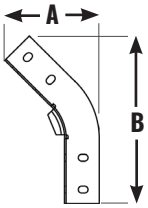

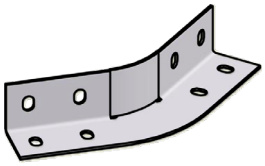

Metal	Part No.
Hot-Dip Galvanized Steel	EOA2-GC2-R3D45
Natural Finish Aluminum	EOA2-NA2-R3D45
Stainless Steel T-304	EOA2-SS2 R3D45T4
Stainless Steel T-316	EOA2-SS2 R3D45T6

A: 6.25” **B: 10.75”**
Nominal Engagement: 3.5”

Includes 3/8” dia. bolting

Tee Angle
3” Radius

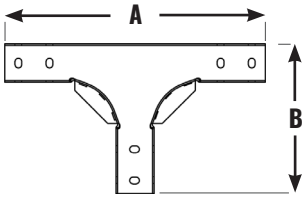

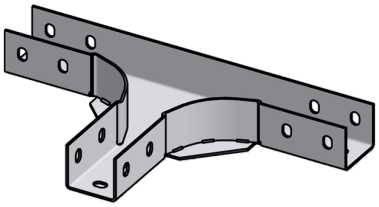

Metal	Part No.
Hot-Dip Galvanized Steel	TA2-GC2-R3D90
Natural Finish Aluminum	TA2-NA2-R3D90
Stainless Steel T-304	TA2-SS2-R3D90T4
Stainless Steel T-316	TA2-SS2-R3D90T6

A: 16.75” **B: 10”**
Nominal Engagement: 3.5”

Includes 3/8” dia. bolting

Cross Angle
3” Radius

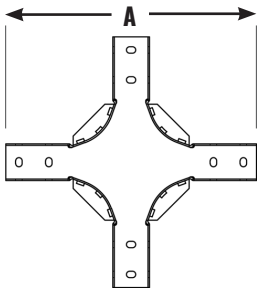

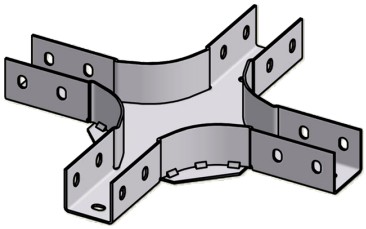

Metal	Part No.
Hot-Dip Galvanized Steel	KA2-GC2-R3D90
Natural Finish Aluminum	KA2-NA2-R3D90
Stainless Steel T-304	KA2-SS2-R3D90T4
Stainless Steel T-316	KA2-SS2-R3D90T6

A: 16.75”
Nominal Engagement: 3.5”

Includes 3/8” dia. bolting

©2021 James C. White Co., Inc. CT2109

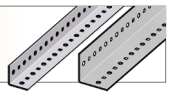

Inside Channel Vertical Adjustable Bend (0-90°)

Patent No.: US 8,167,250 B2

Metal	Part No.
Hot-Dip Galvanized Steel	ICV2-GC2-DA
Natural Finish Aluminum	ICV2-NA2-DA
Stainless Steel T-304	ICV2-SS2-DAT4
Stainless Steel T-316	ICV2-SS2-DAT6

A: 6.0”
Nominal Engagement: 3.5”
SR

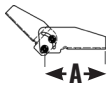

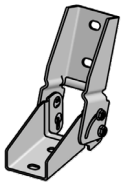

Includes 3/8” dia. bolting (same part shown on page 20). Cut angles so that round holes are on the connecting end.

Outside Channel Vertical Adjustable Bend (0-90°)

Patent No.: US 8,167,250 B2

Metal	Part No.
Hot-Dip Galvanized Steel	OCV2-GC2-DA
Natural Finish Aluminum	OCV2-NA2-DA
Stainless Steel T-304	OCV2-SS2-DAT4
Stainless Steel T-316	OCV2-SS2-DAT6

A: 5.25”
Nominal Engagement: 3.5”
SR

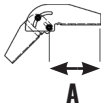

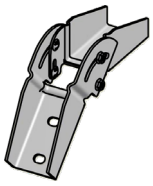

Includes 3/8” dia. bolting (same part shown on page 21). Cut angles so that round holes are on the connecting end.

Offset Channel Vertical Double Adjustable Bend

Patent No.: US 8,167,250 B2

Metal	Part No.
Hot-Dip Galvanized Steel	OCV2-GC2-DDA5
Natural Finish Aluminum	OCV2-NA2-DDA5
Stainless Steel T-304	OCV2-SS2-DDA5T4
Stainless Steel T-316	OCV2-SS2-DDA5T6

A: 6.0”
X: Offset at 45° (pictured): 3.25”
Max offset (bends at 90°): 5”
Nominal Engagement: 3.5”
SR

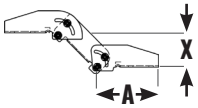

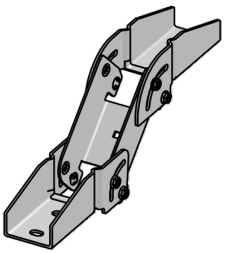

Includes 3/8” dia. bolting (same part shown on page 22). Cut angles so that round holes are on the connecting end.

Horizontal Elbow Adjustable Bend (0-90°)

Patent No.: US 8,573,409 B2
6” Min. Radius

Metal	Part No.
Hot-Dip Galvanized Steel	EC2-GC2-R6DA
Natural Finish Aluminum	EC2-NA2-R6DA
Stainless Steel T-304	EC2-SS2-R6DAT4
Stainless Steel T-316	EC2-SS2-R6DAT6

A = 13” **B = 7” (nominal dim.)**

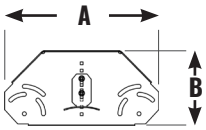

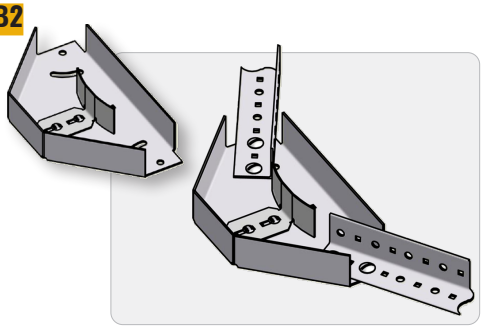

Includes 3/8” dia. bolts and locking nuts

SR Safety-Related options, pg. 2

©2021 James C. White Co., Inc. CT2109

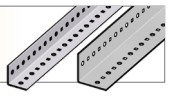

Elbow Inside Angle - 90°
14” Radius

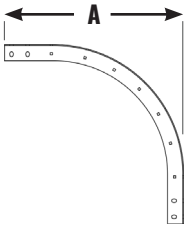

Includes 3/8” dia. bolting

Metal	Part No.
Hot-Dip Galvanized Steel	EIA2-GC2-R14D90
Natural Finish Aluminum	EIA2-NA2-R14D90
Stainless Steel T-304	EIA2 SS2 R14D90T4
Stainless Steel T-316	EIA2 SS2 R14D90T6

A: 19.75”
Nominal Engagement: 3.5”
SR

Elbow Inside Angle - 45°
14” Radius

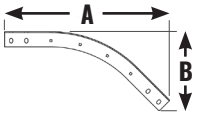

Includes 3/8” dia. bolting

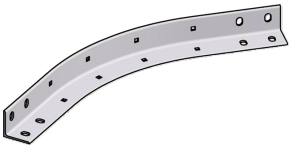

Metal	Part No.
Hot-Dip Galvanized Steel	EIA2-GC2-R14D45
Natural Finish Aluminum	EIA2-NA2-R14D45
Stainless Steel T-304	EIA2 SS2 R14D45T4
Stainless Steel T-316	EIA2 SS2 R14D45T6

A: 21.5” **B: 10.5”**
Nominal Engagement: 3.5”
SR

Elbow Outside Angle - 90°
12” Radius

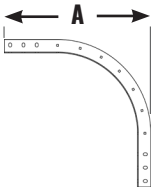

Includes 3/8” dia. bolting

Metal	Part No.
Hot-Dip Galvanized Steel	EOA2-GC2-R12D90
Natural Finish Aluminum	EOA2-NA2-R12D90
Stainless Steel T-304	EOA2 SS2 R12D90T4
Stainless Steel T-316	EOA2 SS2 R12D90T6

A: 22.0”
Nominal Engagement: 3.5”
SR

Elbow Outside Angle - 45°
12” Radius

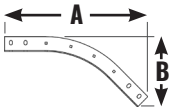

Includes 3/8” dia. bolting

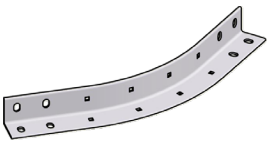

Metal	Part No.
Hot-Dip Galvanized Steel	EOA2-GC2-R12D45
Natural Finish Aluminum	EOA2-NA2-R12D45
Stainless Steel T-304	EOA2 SS2 R12D45T4
Stainless Steel T-316	EOA2 SS2 R12D45T6

A: 21.5” **B: 10.5”**
Nominal Engagement: 3.5”
SR

SR Safety-Related options, pg. 2

©2021 James C. White Co., Inc. CT2109

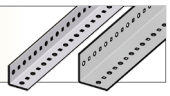

Tee Angle
12” Radius

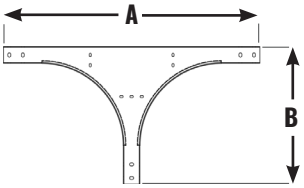

Includes 3/8” dia. bolting

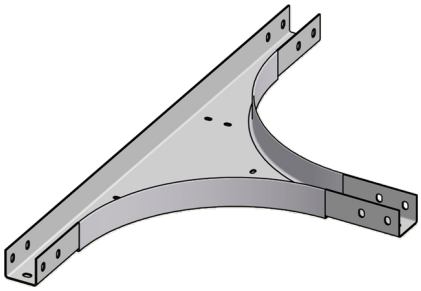

Metal	Part No.
Hot-Dip Galvanized Steel	TA2-GC2-R12D90
Natural Finish Aluminum	TA2-NA2-R12D90
Stainless Steel T-304	TA2-SS2 R12D90T4
Stainless Steel T-316	TA2-SS2 R12D90T6

A: 37.75” **B: 20.25”**
Nominal Engagement: 3.5”

Cross Angle
12” Radius

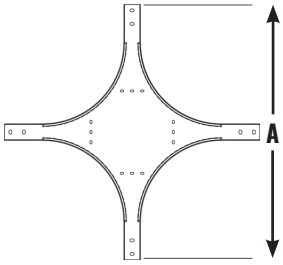

Includes 3/8” dia. bolting

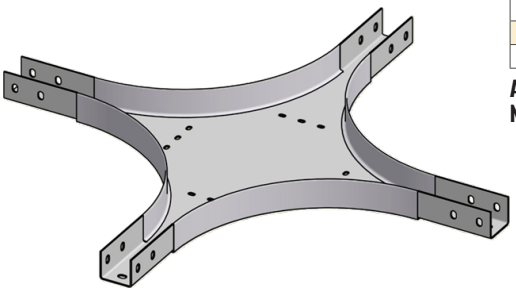

Metal	Part No.
Hot-Dip Galvanized Steel	KA2-GC2-R12D90
Natural Finish Aluminum	KA2-NA2-R12D90
Stainless Steel T-304	KA2-SS2 R12D90T4
Stainless Steel T-316	KA2-SS2 R12D90T6

A: 37.75”
Nominal Engagement: 3.5”

©2021 James C. White Co., Inc. CT2109

SR Safety-Related options, pg. 2

Flat

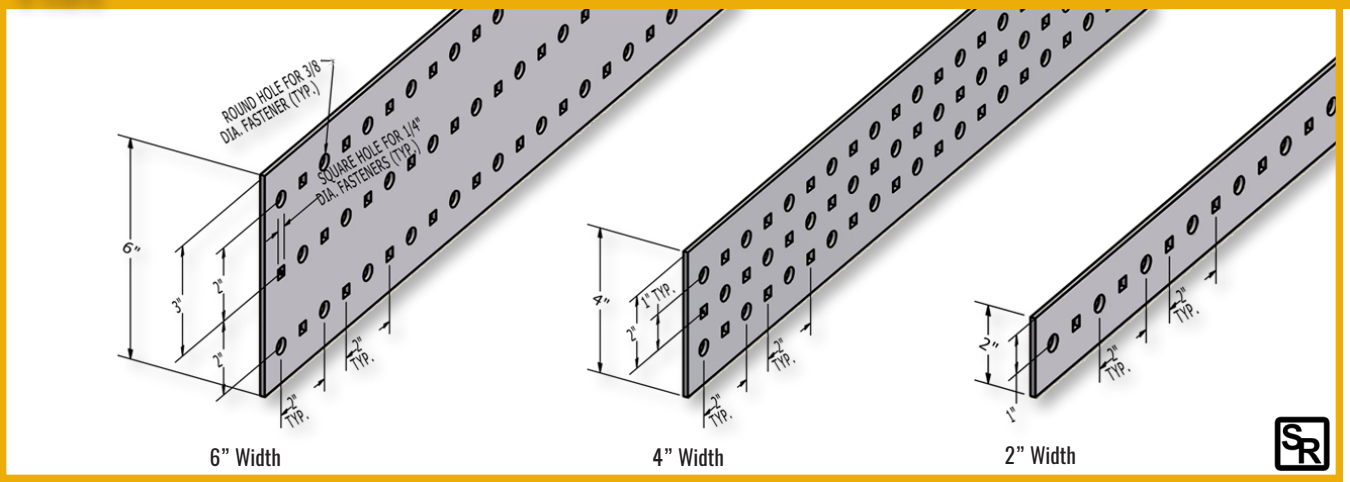

6" Width 4" Width 2" Width

Flat

TUBETRACK® standard flat sections are available in 4 corrosion-resistant metals and 3 widths. TUBETRACK® components are factory inspected for quality of fabrication detail, finish, straightness, and appearance. Flat details are shown for standard size, part numbers, materials, widths, lengths, and gages.

NOTE: TUBETRACK® Flats and Angles are not UL classified.

Metal	Width	Flat Part No.	Flat Gage	Flat Length
Hot-Dip Galvanized Steel	2 4 6	F2-GC-144 F4-GC-144 F6-GC-144	12	12'
Natural Finish Aluminum	2 4 6	F2-NA-144 F4-NA-144 F6-NA-144	12	12'
Stainless Steel T-304	2 4 6	F2-SS-144-T4 F4-SS-144-T4 F6-SS-144-T4	16	12′
Stainless Steel T-316	2 4 6	F2-SS-144-T6 F4-SS-144-T6 F6-SS-144-T6	16	12′

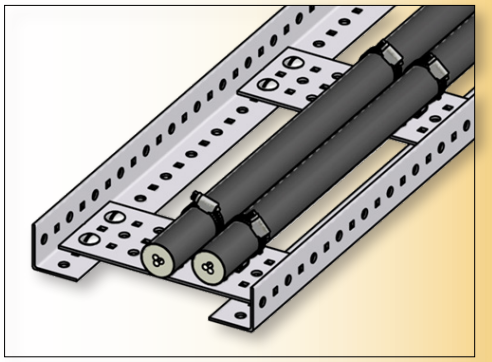

Use TUBETRACK® 2" or 3" Angle and Flat to field-fabricate light ladder tray. Purchase fasteners separately. See page 3 for TUBETRACK® Angle and page 44 for 3/8" Truss-Head Bolts & Nuts to complete the assembly.

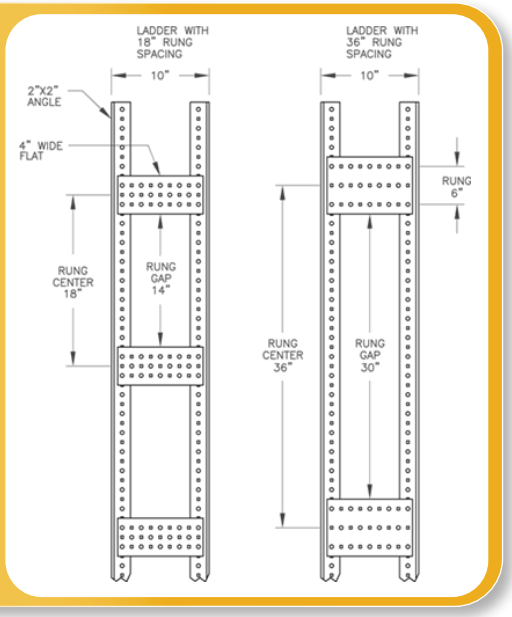

Safety-Related options, pg. 2

©2021 James C. White Co., Inc. CT2109

3" Deep Channel Tray

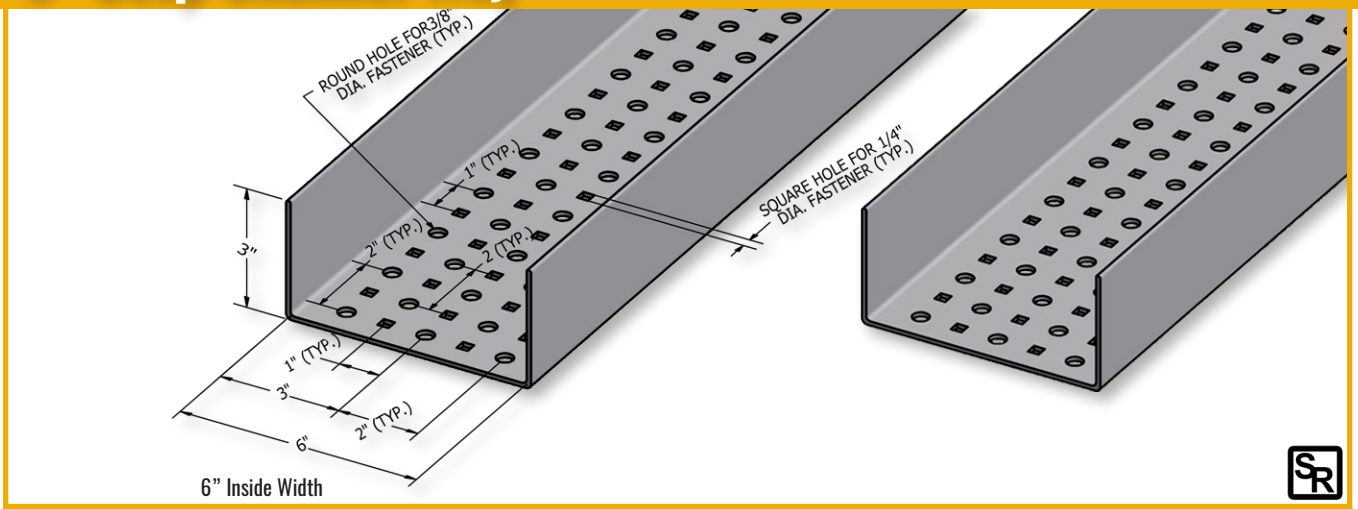

Channels - 3" Deep

NEW FROM JCWCO:
3" Deep TUBETRACK® standard tray channel sections are available in 4 corrosion-resistant metals and 6" channel width. TUBETRACK® components are factory inspected for quality of fabrication detail, finish, straightness, and appearance.

Channel tray details are shown for standard TUBETRACK® part numbers, materials, widths, lengths, gages, and covers.

See page 50 for Load and Deflection information.

Metal	Width	Channel Tray Part No.**	Chan. Gage	Chan. Length	Cover Part No. (20 ga.)	Cover Length
Natural Finish Alum.	6	CH6-NA3	12	20'	CV-CH6-NA	10'
Stainless Steel T-304	6**	CH6-SS3T4-144-4	14	12'	CV-CH6-SS4-144	12'
Stainless Steel T-316	6**	CH6-SS3T6-144-4	14	12'	CV-CH6-SS6-144	12'

** 3" deep Channel Tray is a new product - may not be available from stock. Contact factory.

©2021 James C. White Co., Inc. CT2109

Channel Splice

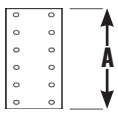

Includes 3/8" dia. bolting

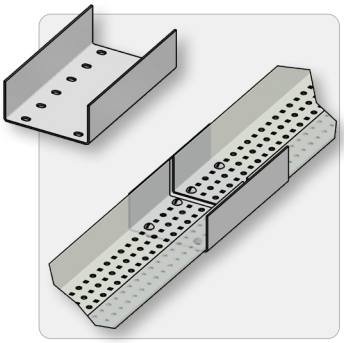

Metal	Width	Part No.**	Cover Part No.
Natural Finish Alum.	6	SC6-NA3	CV-S6NA2
Stainless Steel T-304	6**	SC6-SS3T4-4	CV-S6SS2T4
Stainless Steel T-316	6**	SC6-SS3T6-4	CV-S6SS2T6

A: 11.50"
Nominal Engagement: 5.5"
** 3" deep Channel Tray is a new product - may not be available from stock. Contact factory.

Transition Splice Right Hand

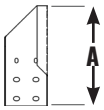

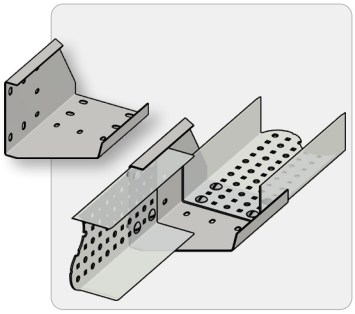

Metal	Width	Part No.	Cover Part No.
Hot-Dip Galv. Steel*	6	SCT6-GC2-RH	-
Natural Finish Alum.	6	SCT6-NA2-RH	-
Stainless Steel T-304	6	SCT6-SS2T4-RH	-
Stainless Steel T-316	6	SCT6-SS2T6-RH	-

A: 10.50"
Nominal Engagement: 3.5"

SR Transition Splices are marked with "L" or "R" to indicate Left or Right

Transition Splice Left Hand

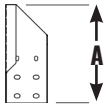

Includes 3/8" dia. bolting

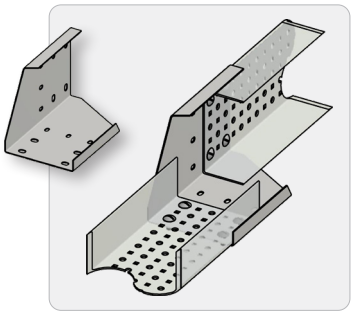

Metal	Width	Part No.	Cover Part No.
Hot-Dip Galv. Steel*	6	SCT6-GC2-LH	-
Natural Finish Alum.	6	SCT6-NA2-LH	-
Stainless Steel T-304	6	SCT6-SS2T4-LH	-
Stainless Steel T-316	6	SCT6-SS2T6-LH	-

A: 10.50"
Nominal Engagement: 3.5"

SR Transition Splices are marked with "L" or "R" to indicate Left or Right

Channel & Fitting Cover Clamps

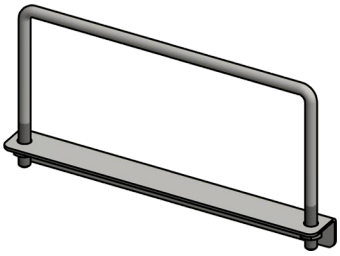

Sold Separately from Cover

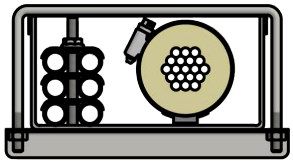

- Clamp: CCC6-SS6-3
- Channel: 6" x 3"

Channel Width	Channel Depth	Part No. Cover Clamp for Channel	Part No. Cover Clamp for Fittings
6	3	CCC6-SS6-3	FCC6-SS6-3

Four piece set includes base, U-bolt, and two hex flange nuts, all in 300 series stainless steel. Straight length covers (10 ft. and 12 ft. long) usually require three Channel Cover Clamps ("CCC"), and fitting covers usually require one Fitting Cover Clamp ("FCC") per end. Bases are marked with "C" or "F" to indicate Channel or Fitting.
Also available in 304 Stainless Steel - contact Factory.

©2021 James C. White Co., Inc. CT2109

Horizontal Drop-Out Fitting

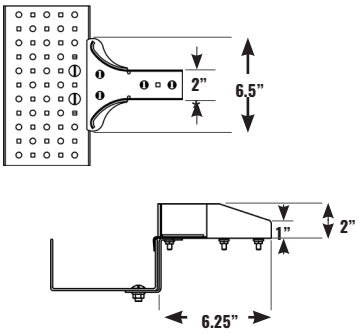

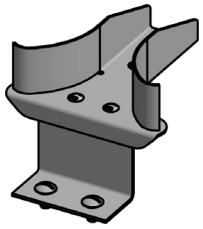

Metal	Width	Part No.
Stainless Steel T-304	2	DHC2-SS2-3T4
Stainless Steel T-316		-

Nominal Engagement: 3.5"

See pg. 31 for Horizontal Drop-Out Fitting for 1" deep tray

* Same width as standard 2" wide TUBETRACK® tray. Use with any CABLE-RACE® or TUBETRACK® fitting.

Attachable Horizontal Drop-Out Fitting

- Drop-Out to an instrumentation station or work station
- Bolt directly to any 3" deep TUBETRACK® tray
- No need to cut or modify existing mainline tray
- Drop-Out at any point along the TUBETRACK® main line tray
- Extend using any 2" wide CABLE-RACE® or TUBETRACK® tray fitting
- Use single Drop-Out fitting with a TUBETRACK® fitting for desired configuration
- All TUBETRACK® fittings include required fasteners
- Includes mounting bracket and fasteners for connection to 3" deep tray
- Available in stainless steel - fits TUBETRACK® tray of any metal

Examples of possible configurations using this single fitting for each Drop-Out:

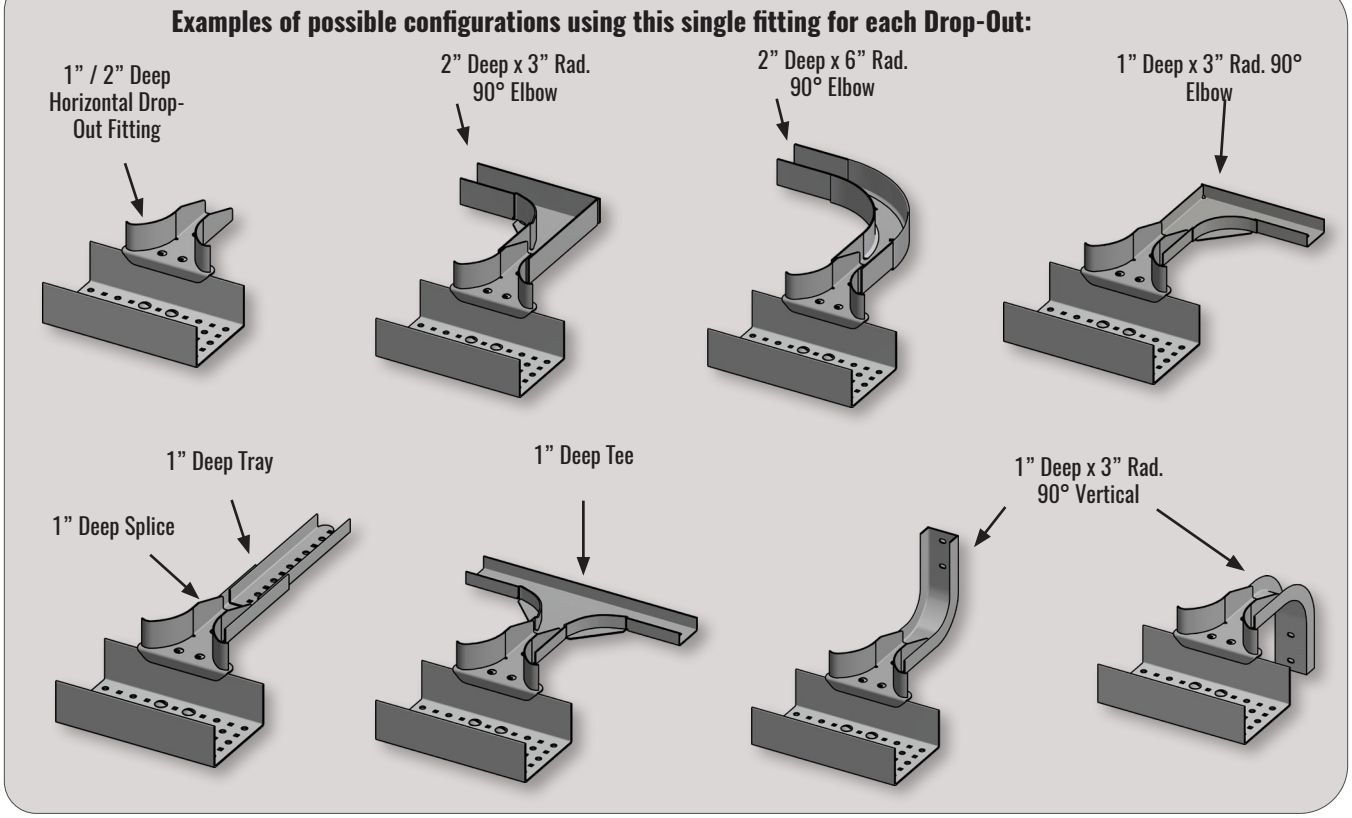

©2021 James C. White Co., Inc. CT2109

2” Deep Channel Tray

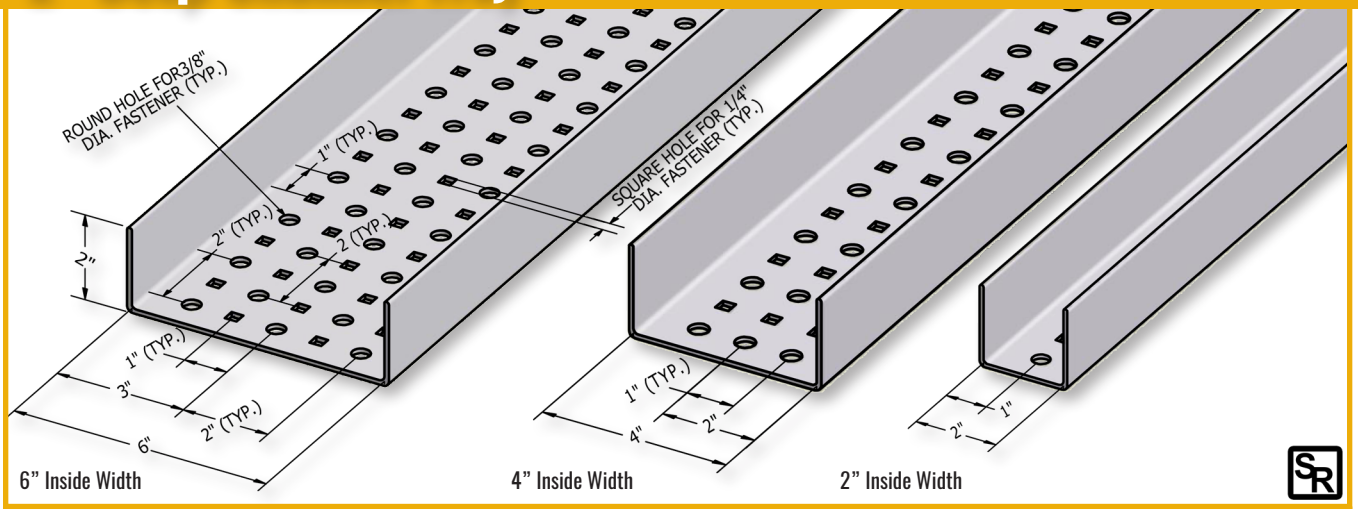

Channels - 2” Deep

TUBETRACK® standard tray channel sections are available in 4 corrosion-resistant metals and 3 channel widths. TUBETRACK® components are factory inspected for quality of fabrication detail, finish, straightness, and appearance.

Channel tray details are shown for standard TUBETRACK® part numbers, materials, widths, lengths, gages, and covers. **Other non-standard gages are available for 304SS and 316SS channels but are generally not available from factory stock.**

See page 49 for Load and Deflection information.

Metal	Width	Channel Tray Part No.	Chan. Gage	Chan. Length	Cover Part No. (20 ga.)	Cover Length
Hot-Dip Galv. Steel*	2 4 6	CH2-GC2 CH4-GC2 CH6-GC2	12	20’	CV-CH2-MG CV-CH4-MG CV-CH6-MG	10’
Natural Finish Alum.	2 4 6	CH2-NA2-144 CH4-NA2-144 CH6-NA2-144	12	12’	CV-CH2-NA CV-CH4-NA CV-CH6-NA	10’
Stainless Steel T-304	2 4 6	CH2-SS2T4-144-6 CH4-SS2T4-144-6 CH6-SS2T4-144-6	16	12’	CV-CH2-SS4-144 CV-CH4-SS4-144 CV-CH6-SS4-144	12’
Stainless Steel T-316	2 4 6	CH2-SS2T6-144-6 CH4-SS2T6-144-6 CH6-SS2T6-144-6	16	12’	CV-CH2-SS6-144 CV-CH4-SS6-144 CV-CH6-SS6-144	12’

Non-Standard Gages:

Stainless Steel T-304	2 4 6	CH2-SS2T4-144-4 CH4-SS2T4-144-4 CH6-SS2T4-144-4	14	12’	CV-CH2-SS4-144 CV-CH4-SS4-144 CV-CH6-SS4-144	12’
	2 4 6	- - -	12	12'	- - -	12'
Stainless Steel T-316	2 4 6	CH2-SS2T6-144-4 CH4-SS2T6-144-4 CH6-SS2T6-144-4	14	12’	CV-CH2-SS6-144 CV-CH4-SS6-144 CV-CH6-SS6-144	12’
	2 4 6	- - -	12	12'	- - -	12'

Structural connections for 2” deep TUBETRACK® tray splices and bends are provided with 3/8” dia. bolt sets (truss head bolts with flanged locking nuts). Truss head bolts with hex nuts and flat washers are optional upon request. Bolt sets are supplied with all TUBETRACK® splices and bends.

Standard fastener metals include:

- Zinc-plated bolts with galvanized fittings
- 18-8 stainless bolts with aluminum fittings
- 18-8 stainless bolts with 304 SS fittings
- 316 stainless bolts with 316 SS fittings

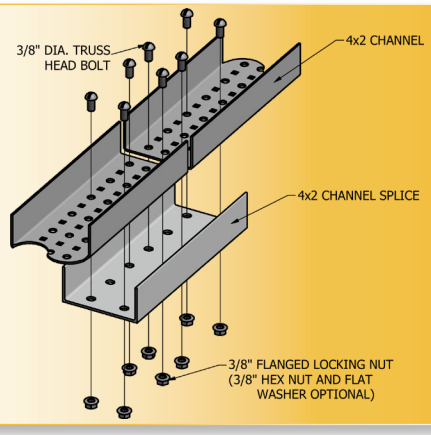

Bolted Connections

TUBETRACK® uses only tightenable fasteners to secure tray connections and maintain the conductivity necessary for UL classification. Splices bolt through the first and third round holes in each end of a splice for maximum strength. Bolt sets are supplied with each TUBETRACK® splice and bend. Stainless steel bolting is standard with stainless steel and aluminum TUBETRACK® fittings. Stainless steel bolting is optional with galvanized TUBETRACK® for an additional cost. Contact factory for additional information.

Classifications of channels, splices, bends, pg. 49
Safety-Related options, pg. 2

*Fittings are HDGF; Covers are mill-galvanized

©2021 James C. White Co., Inc. CT2109

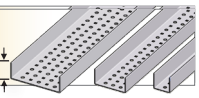

Channel Splice

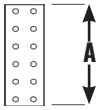

Includes 3/8" dia. bolting

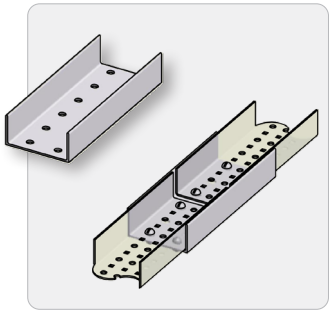

Metal	Width	Part No.	Cover Part No.
Hot-Dip	2	SC2-GC2	CV-S2MG2
Galv.	4	SC4-GC2	CV-S4MG2
Steel*	6	SC6-GC2	CV-S6MG2
Natural	2	SC2-NA2	CV-S2NA2
Finish	4	SC4-NA2	CV-S4NA2
Alum.	6	SC6-NA2	CV-S6NA2
Stainless	2	SC2-SS2T4	CV-S2SS2T4
Steel	4	SC4-SS2T4	CV-S4SS2T4
T-304	6	SC6-SS2T4	CV-S6SS2T4
Stainless	2	SC2-SS2T6	CV-S2SS2T6
Steel	4	SC4-SS2T6	CV-S4SS2T6
T-316	6	SC6-SS2T6	CV-S6SS2T6

A: 11.50"
Nominal Engagement: 5.5"

Transition Splice Right Hand

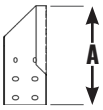

Includes 3/8" dia. bolting

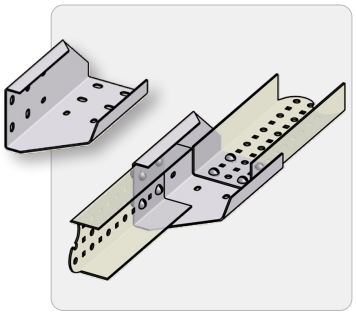

Metal	Width	Part No.	Cover Part No.
Hot-Dip	2	SCT2-GC2-RH	-
Galv.	4	SCT4-GC2-RH	-
Steel*	6	SCT6-GC2-RH	-
Natural	2	SCT2-NA2-RH	-
Finish	4	SCT4-NA2-RH	-
Alum.	6	SCT6-NA2-RH	-
Stainless	2	SCT2-SS2T4-RH	-
Steel	4	SCT4-SS2T4-RH	-
T-304	6	SCT6-SS2T4-RH	-
Stainless	2	SCT2-SS2T6-RH	-
Steel	4	SCT4-SS2T6-RH	-
T-316	6	SCT6-SS2T6-RH	-

A: 10.50"
Nominal Engagement: 3.5"

Transition Splices are marked with "L" or "R" to indicate Left or Right

Transition Splice Left Hand

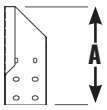

Includes 3/8" dia. bolting

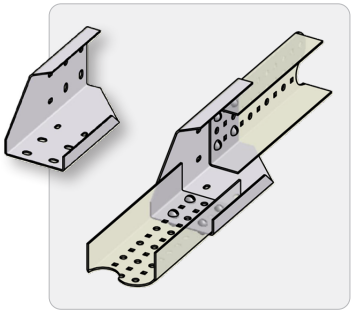

Metal	Width	Part No.	Cover Part No.
Hot-Dip	2	SCT2-GC2-LH	-
Galv.	4	SCT4-GC2-LH	-
Steel*	6	SCT6-GC2-LH	-
Natural	2	SCT2-NA2-LH	-
Finish	4	SCT4-NA2-LH	-
Alum.	6	SCT6-NA2-LH	-
Stainless	2	SCT2-SS2T4-LH	-
Steel	4	SCT4-SS2T4-LH	-
T-304	6	SCT6-SS2T4-LH	-
Stainless	2	SCT2-SS2T6-LH	-
Steel	4	SCT4-SS2T6-LH	-
T-316	6	SCT6-SS2T6-LH	-

A: 10.50"
Nominal Engagement: 3.5"

Transition Splices are marked with "L" or "R" to indicate Left or Right

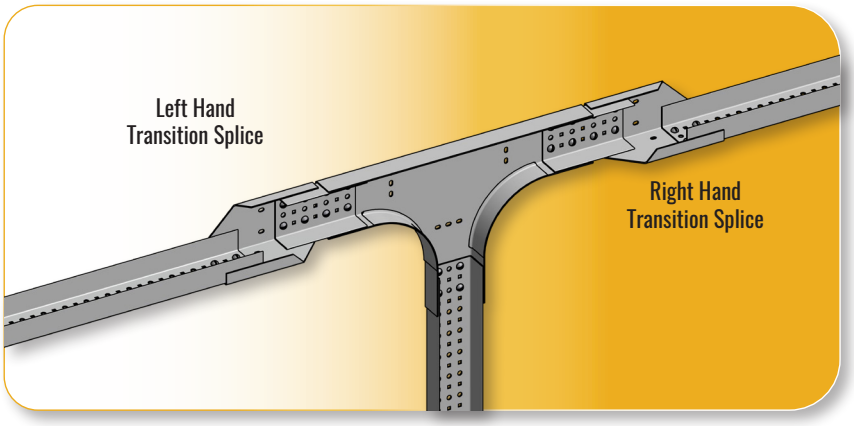

©2021 James C. White Co., Inc. CT2109

Make splice connections for channels through the first and third round holes in each end of the splice for maximum strength.

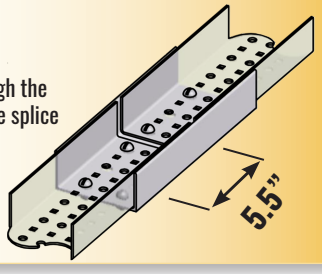

Nominal Engagement

The nominal engagement is the overlap of tray inside the splice or bend fitting. TUBETRACK® channel fits inside each end of this splice for a nominal engagement of 5.5". Use fitting dimensions to estimate straight channel lengths for a job.

Covers

Covers for each fitting are installed over the fitting and over the cover of the channel connected to the fitting to cover the entire connection. Channel Cover Clamps and Fitting Cover Clamps allow for easy re-opening and re-closing after cabling changes. Clamp bases are marked with "C" or "F" to indicate Channel or Fitting.

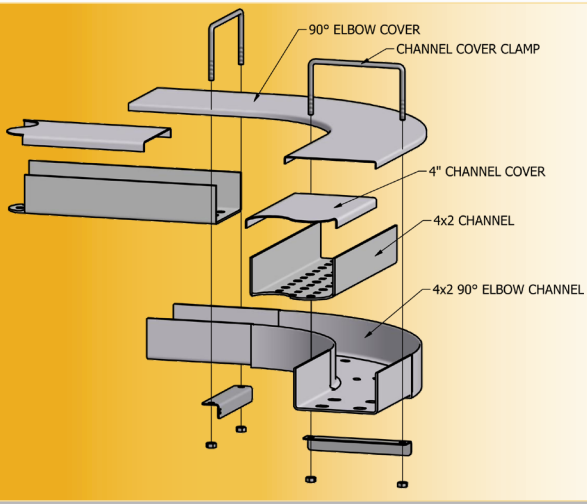

Use TUBETRACK® Fitting Cover Clamps to hold down each end of a bend fitting cover. Channel Cover Clamps hold covers along straight tray.

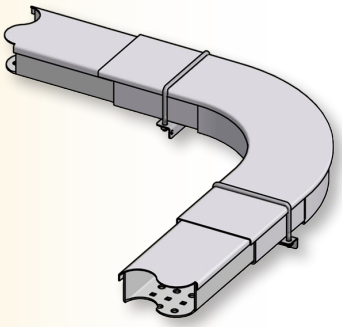

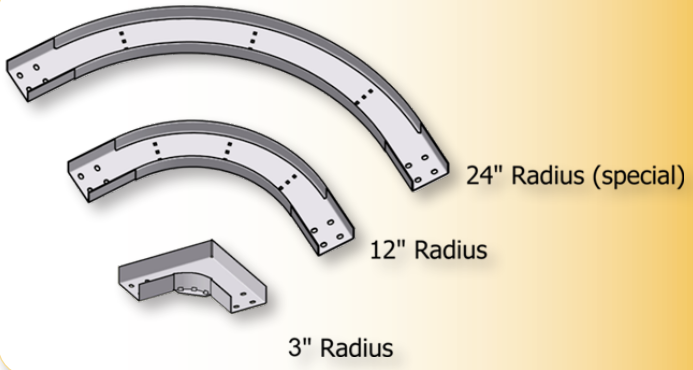

Choice of Radius

3" and 12" radius bends (3 widths, 4 metals) are standard with dimensions and part numbers shown in this catalog. Other bend radii are available. Non-stock standards are available now for many fittings in 6", 18", 24", and 36" radius.

Also available are specific radius requirements. Special radii can mean 29-inch radius or 29-foot radius to match storage tank circumferences or other large curves. Contact factory for additional information.

©2021 James C. White Co., Inc. CT2109

Elbow Channel
90° Bend
3" Min. Radius

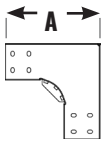

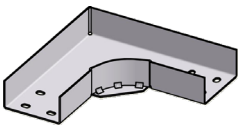

Includes 3/8" dia. bolting

Metal	Width	Part No.	Cover Part No.
Hot-Dip	2	EC2-GC2-R3D90	CV-E2 MG2 R3D90
Galv.	4	EC4-GC2-R3D90	CV-E4 MG2 R3D90
Steel*	6	EC6-GC2-R3D90	CV-E6 MG2 R3D90
Natural	2	EC2-NA2-R3D90	CV-E2 NA2 R3D90
Finish	4	EC4-NA2-R3D90	CV-E4 NA2 R3D90
Alum.	6	EC6-NA2-R3D90	CV-E6 NA2 R3D90
Stainless	2	EC2-SS2-R3D90T4	CV-E2 SS2 R3D90T4
Steel	4	EC4-SS2-R3D90T4	CV-E4 SS2 R3D90T4
T-304	6	EC6-SS2-R3D90T4	CV-E6 SS2 R3D90T4
Stainless	2	EC2-SS2-R3D90T6	CV-E2 SS2 R3D90T6
Steel	4	EC4-SS2-R3D90T6	CV-E4 SS2 R3D90T6
T-316	6	EC6-SS2-R3D90T6	CV-E6 SS2 R3D90T6

A: 7.25" plus channel width
Nominal Engagement: 3.5"

Elbow Channel
90° Bend
6" Min. Radius

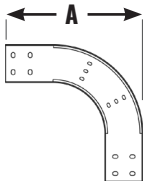

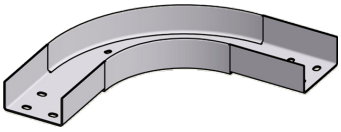

Includes 3/8" dia. bolting

Metal	Width	Part No.	Cover Part No.
Hot-Dip	2	EC2-GC2-R6D90	CV-E2 MG2 R6D90
Galv.	4	EC4-GC2-R6D90	CV-E4 MG2 R6D90
Steel*	6	EC6-GC2-R6D90	CV-E6 MG2 R6D90
Natural	2	EC2-NA2-R6D90	CV-E2 NA2 R6D90
Finish	4	EC4-NA2-R6D90	CV-E4 NA2 R6D90
Alum.	6	EC6-NA2-R6D90	CV-E6 NA2 R6D90
Stainless	2	EC2-SS2-R6D90T4	CV-E2 SS2 R6D904
Steel	4	EC4-SS2-R6D90T4	CV-E4 SS2 R6D904
T-304	6	EC6-SS2-R6D90T4	CV-E6 SS2 R6D904
Stainless	2	EC2-SS2-R6D90T6	CV-E2 SS2 R6D906
Steel	4	EC4-SS2-R6D90T6	CV-E4 SS2 R6D906
T-316	6	EC6-SS2-R6D90T6	CV-E6 SS2 R6D906

A: 12.0" plus channel width
Nominal Engagement: 3.5"

Elbow Channel
45° Bend
3" Min. Radius

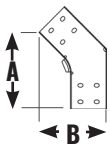

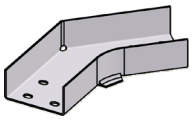

Includes 3/8" dia. bolting

Metal	Width	Part No.	Cover Part No.
Hot-Dip	2	EC2-GC2-R3D45	CV-E2 MG2 R3D45
Galv.	4	EC4-GC2-R3D45	CV-E4 MG2 R3D45
Steel*	6	EC6-GC2-R3D45	CV-E6 MG2 R3D45
Natural	2	EC2-NA2-R3D45	CV-E2 NA2 R3D45
Finish	4	EC4-NA2-R3D45	CV-E4 NA2 R3D45
Alum.	6	EC6-NA2-R3D45	CV-E6 NA2 R3D45
Stainless	2	EC2-SS2-R3D45T4	CV-E2 SS2 R3D454
Steel	4	EC4-SS2-R3D45T4	CV-E4 SS2 R3D454
T-304	6	EC6-SS2-R3D45T4	CV-E6 SS2 R3D454
Stainless	2	EC2-SS2-R3D45T6	CV-E2 SS2 R3D456
Steel	4	EC4-SS2-R3D45T6	CV-E4 SS2 R3D456
T-316	6	EC6-SS2-R3D45T6	CV-E6 SS2 R3D456

A: 9.31" **B: 4" plus channel width**
Nominal Engagement: 3.5"

Elbow Channel
45° Bend
6" Min. Radius

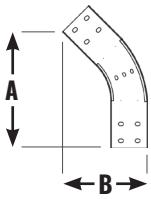

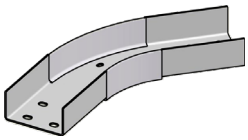

Includes 3/8" dia. bolting

Metal	Width	Part No.	Cover Part No.
Hot-Dip	2	EC2-GC2-R6D45	CV-E2 MG2 R6D45
Galv.	4	EC4-GC2-R6D45	CV-E4 MG2 R6D45
Steel*	6	EC6-GC2-R6D45	CV-E6 MG2 R6D45
Natural	2	EC2-NA2-R6D45	CV-E2 NA2 R6D45
Finish	4	EC4-NA2-R6D45	CV-E4 NA2 R6D45
Alum.	6	EC6-NA2-R6D45	CV-E6 NA2 R6D45
Stainless	2	EC2-SS2-R6D45T4	CV-E2 SS2 R6D454
Steel	4	EC4-SS2-R6D45T4	CV-E4 SS2 R6D454
T-304	6	EC6-SS2-R6D45T4	CV-E6 SS2 R6D454
Stainless	2	EC2-SS2-R6D45T6	CV-E2 SS2 R6D456
Steel	4	EC4-SS2-R6D45T6	CV-E4 SS2 R6D456
T-316	6	EC6-SS2-R6D45T6	CV-E6 SS2 R6D456

A: 13.75" **B: 6.0" plus channel width**
Nominal Engagement: 3.5"

©2021 James C. White Co., Inc. CT2109

Classifications of channels, splices, bends, pg. 49
Safety-Related options, pg. 2

*Fittings are HDGF; Covers are mill-galvanized

Tee Channel
90° Bend
3" Min. Radius

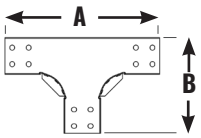

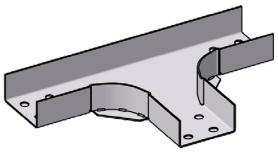

Includes 3/8" dia. bolting

Metal	Width	Part No.	Cover Part No.
Hot-Dip	2	TC2-GC2-R3D90	CV-T2 MG2 R3D90
Galv.	4	TC4-GC2-R3D90	CV-T4 MG2 R3D90
Steel*	6	TC6-GC2-R3D90	CV-T6 MG2 R3D90
Natural	2	TC2-NA2-R3D90	CV-T2 NA2 R3D90
Finish	4	TC4-NA2-R3D90	CV-T4 NA2 R3D90
Alum.	6	TC6-NA2-R3D90	CV-T6 NA2 R3D90
Stainless	2	TC2-SS2-R3D90T4	CV-T2 SS2 R3D90T4
Steel	4	TC4-SS2-R3D90T4	CV-T4 SS2 R3D90T4
T-304	6	TC6-SS2-R3D90T4	CV-T6 SS2 R3D90T4
Stainless	2	TC2-SS2-R3D90T6	CV-T2 SS2 R3D90T6
Steel	4	TC4-SS2-R3D90T6	CV-T4 SS2 R3D90T6
T-316	6	TC6-SS2-R3D90T6	CV-T6 SS2 R3D90T6

A: 14.25" plus channel width
B: 7.25" plus channel width
Nominal Engagement: 3.5"

Tee Channel
90° Bend
6" Min. Radius

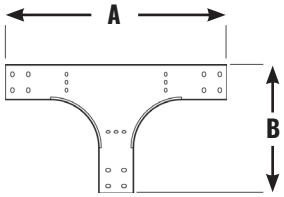

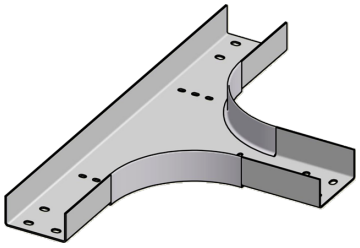

Includes 3/8" dia. bolting

Metal	Width	Part No.	Cover Part No.
Hot-Dip	2	TC2-GC2-R6D90	CV-T2 MG2 R6D90
Galv.	4	TC4-GC2-R6D90	CV-T4 MG2 R6D90
Steel*	6	TC6-GC2-R6D90	CV-T6 MG2 R6D90
Natural	2	TC2-NA2-R6D90	CV-T2 NA2 R6D90
Finish	4	TC4-NA2-R6D90	CV-T4 NA2 R6D90
Alum.	6	TC6-NA2-R6D90	CV-T6 NA2 R6D90
Stainless	2	TC2-SS2-R6D90T4	CV-T2 SS2 R6D904
Steel	4	TC4-SS2-R6D90T4	CV-T4 SS2 R6D904
T-304	6	TC6-SS2-R6D90T4	CV-T6 SS2 R6D904
Stainless	2	TC2-SS2-R6D90T6	CV-T2 SS2 R6D906
Steel	4	TC4-SS2-R6D90T6	CV-T4 SS2 R6D906
T-316	6	TC6-SS2-R6D90T6	CV-T6 SS2 R6D906

A: 23.75" plus channel width
B: 12.25" plus channel width
Nominal Engagement: 3.5"

Cross Channel
90° Bend
3" Min. Radius

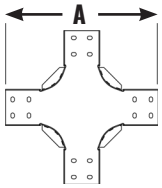

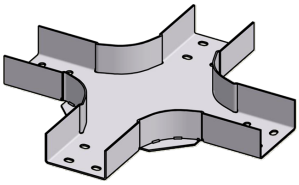

Includes 3/8" dia. bolting

Metal	Width	Part No.	Cover Part No.
Hot-Dip	2	KC2-GC2-R3D90	CV-K2 MG2 R3D90
Galv.	4	KC4-GC2-R3D90	CV-K4 MG2 R3D90
Steel*	6	KC6-GC2-R3D90	CV-K6 MG2 R3D90
Natural	2	KC2-NA2-R3D90	CV-K2 NA2 R3D90
Finish	4	KC4-NA2-R3D90	CV-K4 NA2 R3D90
Alum.	6	KC6-NA2-R3D90	CV-K6 NA2 R3D90
Stainless	2	KC2-SS2-R3D90T4	CV-K2 SS2 R3D90T4
Steel	4	KC4-SS2-R3D90T4	CV-K4 SS2 R3D90T4
T-304	6	KC6-SS2-R3D90T4	CV-K6 SS2 R3D90T4
Stainless	2	KC2-SS2-R3D90T6	CV-K2 SS2 R3D90T6
Steel	4	KC4-SS2-R3D90T6	CV-K4 SS2 R3D90T6
T-316	6	KC6-SS2-R3D90T6	CV-K6 SS2 R3D90T6

A: 14.5" plus channel width
Nominal Engagement: 3.5"

Cross Channel
90° Bend
6" Min. Radius

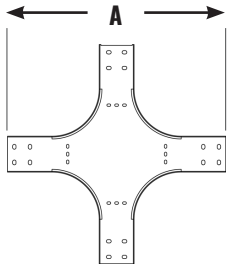

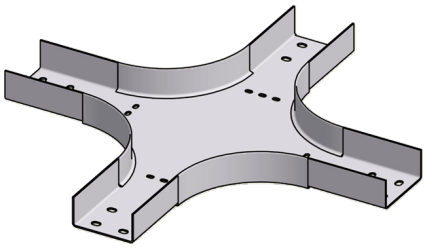

Includes 3/8" dia. bolting

Metal	Width	Part No.	Cover Part No.
Hot-Dip	2	KC2-GC2-R6D90	CV-K2 MG2 R6D90
Galv.	4	KC4-GC2-R6D90	CV-K4 MG2 R6D90
Steel*	6	KC6-GC2-R6D90	CV-K6 MG2 R6D90
Natural	2	KC2-NA2-R6D90	CV-K2 NA2 R6D90
Finish	4	KC4-NA2-R6D90	CV-K4 NA2 R6D90
Alum.	6	KC6-NA2-R6D90	CV-K6 NA2 R6D90
Stainless	2	KC2-SS2-R6D90T4	CV-K2 SS2 R6D904
Steel	4	KC4-SS2-R6D90T4	CV-K4 SS2 R6D904
T-304	6	KC6-SS2-R6D90T4	CV-K6 SS2 R6D904
Stainless	2	KC2-SS2-R6D90T6	CV-K2 SS2 R6D906
Steel	4	KC4-SS2-R6D90T6	CV-K4 SS2 R6D906
T-316	6	KC6-SS2-R6D90T6	CV-K6 SS2 R6D906

A: 23.75" plus channel width
Nominal Engagement: 3.5"

©2021 James C. White Co., Inc. CT2109

Horizontal Elbow
Adjustable Bend (0-90°)
Patent No.: US 8,573,409 B2
6" Min. Radius

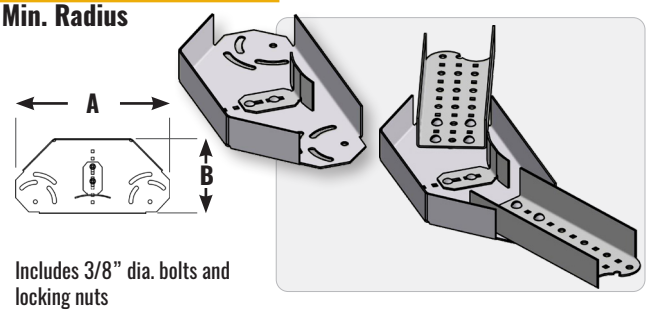

Includes 3/8" dia. bolts and locking nuts

Metal	Width	Part No.	Cover Part No.
Hot-Dip	2	EC2-GC2-R6DA	-
Galv.	4	EC4-GC2-R6DA	-
Steel	6	EC6-GC2-R6DA	-
Natural	2	EC2-NA2-R6DA	-
Finish	4	EC4-NA2-R6DA	-
Alum.	6	EC6-NA2-R6DA	-
Stainless	2	EC2-SS2-R6DAT4	-
Steel	4	EC4-SS2-R6DAT4	-
T-304	6	EC6-SS2-R6DAT4	-
Stainless	2	EC2-SS2-R6DAT6	-
Steel	4	EC4-SS2-R6DAT6	-
T-316	6	EC6-SS2-R6DAT6	-

2" Width Tray: A = 13", B = 7" (nominal dim.)
4" Width Tray: A = 16", B = 8" (nominal dim.)
6" Width Tray: A = 16", B = 10" (nominal dim.)
Nominal Engagement: 3.5"

Square Inside Channel Vertical
90° Bend
0-1" Radius

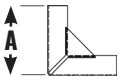

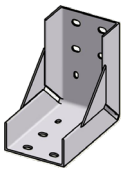

Includes 3/8" dia. bolting

Metal	Width	Part No.	Cover Part No.
Hot-Dip	2	SICV2-GC2-D90	CV-I2 MG2 R3D90
Galv.	4	SICV4-GC2-D90	CV-I4 MG2 R3D90
Steel*	6	SICV6-GC2-D90	CV-I6 MG2 R3D90
Natural	2	SICV2-NA2-D90	CV-I2 NA2 R3D90
Finish	4	SICV4-NA2-D90	CV-I4 NA2 R3D90
Alum.	6	SICV6-NA2-D90	CV-I6 NA2 R3D90
Stainless	2	SICV2-SS2-D90T4	CV-I2 SS2 R3D90T4
Steel	4	SICV4-SS2-D90T4	CV-I4 SS2 R3D90T4
T-304	6	SICV6-SS2-D90T4	CV-I6 SS2 R3D90T4
Stainless	2	SICV2-SS2-D90T6	CV-I2 SS2 R3D90T6
Steel	4	SICV4-SS2-D90T6	CV-I4 SS2 R3D90T6
T-316	6	SICV6-SS2-D90T6	CV-I6 SS2 R3D90T6

A: 7.25"
Nominal Engagement: 3.5"

Inside Channel Vertical
90° Bend
3" Radius

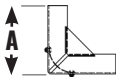

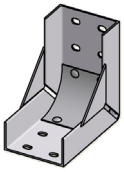

Includes 3/8" dia. bolting

Metal	Width	Part No.	Cover Part No.
Hot-Dip	2	ICV2-GC2-R3D90	CV-I2 MG2 R3D90
Galv.	4	ICV4-GC2-R3D90	CV-I4 MG2 R3D90
Steel*	6	ICV6-GC2-R3D90	CV-I6 MG2 R3D90
Natural	2	ICV2-NA2-R3D90	CV-I2 NA2 R3D90
Finish	4	ICV4-NA2-R3D90	CV-I4 NA2 R3D90
Alum.	6	ICV6-NA2-R3D90	CV-I6 NA2 R3D90
Stainless	2	ICV2-SS2 R3D90T4	CV-I2 SS2 R3D90T4
Steel	4	ICV4-SS2 R3D90T4	CV-I4 SS2 R3D90T4
T-304	6	ICV6-SS2 R3D90T4	CV-I6 SS2 R3D90T4
Stainless	2	ICV2-SS2 R3D90T6	CV-I2 SS2 R3D90T6
Steel	4	ICV4-SS2 R3D90T6	CV-I4 SS2 R3D90T6
T-316	6	ICV6-SS2 R3D90T6	CV-I6 SS2 R3D90T6

A: 7.25" **B: 8.0"**
Nominal Engagement: 3.5"

Inside Channel Vertical
90° Bend
6" Radius

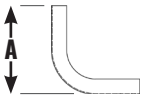

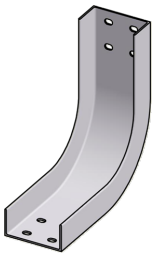

Includes 3/8" dia. bolting

Metal	Width	Part No.	Cover Part No.
Hot-Dip	2	ICV2-GC2-R6D90	CV-I2 MG2 R6D90
Galv.	4	ICV4-GC2-R6D90	CV-I4 MG2 R6D90
Steel*	6	ICV6-GC2-R6D90	CV-I6 MG2 R6D90
Natural	2	ICV2-NA2-R6D90	CV-I2 NA2 R6D90
Finish	4	ICV4-NA2-R6D90	CV-I4 NA2 R6D90
Alum.	6	ICV6-NA2-R6D90	CV-I6 NA2 R6D90
Stainless	2	ICV2-SS2 R6D90T4	CV-I2 SS2 R6D904
Steel	4	ICV4-SS2 R6D90T4	CV-I4 SS2 R6D904
T-304	6	ICV6-SS2 R6D90T4	CV-I6 SS2 R6D904
Stainless	2	ICV2-SS2 R6D90T6	CV-I2 SS2 R6D906
Steel	4	ICV4-SS2 R6D90T6	CV-I4 SS2 R6D906
T-316	6	ICV6-SS2 R6D90T6	CV-I6 SS2 R6D906

A: 10.75"
Nominal Engagement: 3.5"

©2021 James C. White Co., Inc. CT2109

Classifications of channels, splices, bends, pg. 49
Safety-Related options, pg. 2
*Fittings are HDGF; Covers are mill-galvanized

Square Inside Channel Vertical
45° Bend
0-1" Radius

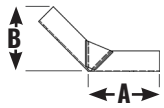

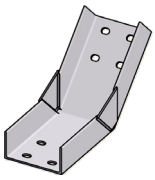

Includes 3/8" dia. bolting

Metal	Width	Part No.	Cover Part No.
Hot-Dip	2	SICV2-GC2-D45	CV-SI2 MG2 D45
Galv.	4	SICV4-GC2-D45	CV-SI4 MG2 D45
Steel*	6	SICV6-GC2-D45	CV-SI6 MG2 D45
Natural	2	SICV2-NA2-D45	CV-SI2 NA2 D45
Finish	4	SICV4-NA2-D45	CV-SI4 NA2 D45
Alum.	6	SICV6-NA2-D45	CV-SI6 NA2 D45
Stainless	2	SICV2-SS2-D45T4	CV-SI2 SS2 D45T4
Steel	4	SICV4-SS2-D45T4	CV-SI4 SS2 D45T4
T-304	6	SICV6-SS2-D45T4	CV-SI6 SS2 D45T4
Stainless	2	SICV2-SS2-D45T6	CV-SI2 SS2 D45T6
Steel	4	SICV4-SS2-D45T6	CV-SI4 SS2 D45T6
T-316	6	SICV6-SS2-D45T6	CV-SI6 SS2 D45T6

A: 7.25"
B: 6.5"
Nominal Engagement: 3.5"

Inside Channel Vertical
45° Bend
6" Radius

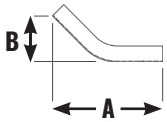

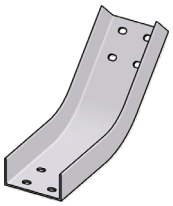

Includes 3/8" dia. bolting

Metal	Width	Part No.	Cover Part No.
Hot-Dip	2	ICV2-GC2-R6D45	CV-I2 MG2 R6D45
Galv.	4	ICV4-GC2-R6D45	CV-I4 MG2 R6D45
Steel*	6	ICV6-GC2-R6D45	CV-I6 MG2 R6D45
Natural	2	ICV2-NA2-R6D45	CV-I2 NA2 R6D45
Finish	4	ICV4-NA2-R6D45	CV-I4 NA2 R6D45
Alum.	6	ICV6-NA2-R6D45	CV-I6 NA2 R6D45
Stainless	2	ICV2-SS2 R6D45T4	CV-I2 SS2 R6D454
Steel	4	ICV4-SS2 R6D45T4	CV-I4 SS2 R6D454
T-304	6	ICV6-SS2 R6D45T4	CV-I6 SS2 R6D454
Stainless	2	ICV2-SS2 R6D45T6	CV-I2 SS2 R6D456
Steel	4	ICV4-SS2 R6D45T6	CV-I6 SS2 R6D456
T-316	6	ICV6-SS2 R6D45T6	CV-I4 SS2 R6D456

A: 15.75" **B: 8.0"**
Nominal Engagement: 3.5"
SR

Inside Channel Vertical
Adjustable Bend (0-90°)
Patent No.: US 8,167,250 B2

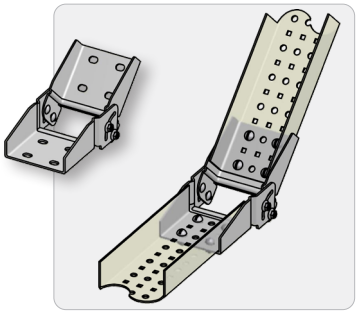

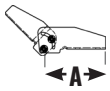

Includes 3/8" dia. bolting

Metal	Width	Part No.	Cover Part No.
Hot-Dip	2	ICV2-GC2-DA	-
Galv.	4	ICV4-GC2-DA	-
Steel	6	ICV6-GC2-DA	-
Natural	2	ICV2-NA2-DA	-
Finish	4	ICV4-NA2-DA	-
Alum.	6	ICV6-NA2-DA	-
Stainless	2	ICV2-SS2-DAT4	-
Steel	4	ICV4-SS2-DAT4	-
T-304	6	ICV6-SS2-DAT4	-
Stainless	2	ICV2-SS2-DAT6	-
Steel	4	ICV4-SS2-DAT6	-
T-316	6	ICV6-SS2-DAT6	-

A: 6.0"
Nominal Engagement: 3.5"
SR

Outside Channel Vertical
90° Bend
0-3" Radius

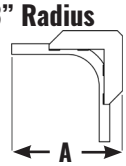

2" Wide

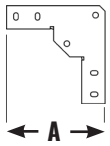

4-6" Wide

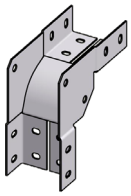

Includes 3/8" dia. bolting

Metal	Width	Part No.	Cover Part No.
Hot-Dip	2	OCV2-GC2-R3D90	CV-O2 MG2 R3D90
Galv.	4	OCV4-GC2-R3D90	CV-O4 MG2 R3D90
Steel*	6	OCV6-GC2-R3D90	CV-O6 MG2 R3D90
Natural	2	OCV2-NA2-R3D90	CV-O2 NA2 R3D90
Finish	4	OCV4-NA2-R3D90	CV-O4 NA2 R3D90
Alum.	6	OCV6-NA2-R3D90	CV-O6 NA2 R3D90
Stainless	2	OCV2-SS2 R3D90T4	CV-O2 SS2 R3D90T4
Steel	4	OCV4-SS2 R3D90T4	CV-O4 SS2 R3D90T4
T-304	6	OCV6-SS2 R3D90T4	CV-O6 SS2 R3D90T4
Stainless	2	OCV2-SS2 R3D90T6	CV-O2 SS2 R3D90T6
Steel	4	OCV4-SS2 R3D90T6	CV-O4 SS2 R3D90T6
T-316	6	OCV6-SS2 R3D90T6	CV-O6 SS2 R3D90T6

A: 9.25"
Nominal Engagement: 3.5"

©2021 James C. White Co., Inc. CT2109

Classifications of channels, splices, bends, pg. 49
Safety-Related options, pg. 2
*Fittings are HDGF; Covers are mill-galvanized

Outside Channel Vertical
90° Bend
6" Min. Radius

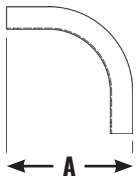

Includes 3/8" dia. bolting

Metal	Width	Part No.	Cover Part No.
Hot-Dip	2	OCV2-GC2-R6D90	CV-O2 MG2 R6D90
Galv.	4	OCV4-GC2-R6D90	CV-O4 MG2 R6D90
Steel*	6	OCV6-GC2-R6D90	CV-O6 MG2 R6D90
Natural	2	OCV2-NA2-R6D90	CV-O2 NA2 R6D90
Finish	4	OCV4-NA2-R6D90	CV-O4 NA2 R6D90
Alum.	6	OCV6-NA2-R6D90	CV-O6 NA2 R6D90
Stainless	2	OCV2-SS2 R6D90T4	CV-O2 SS2 R6D904
Steel	4	OCV4-SS2 R6D90T4	CV-O4 SS2 R6D904
T-304	6	OCV6-SS2 R6D90T4	CV-O6 SS2 R6D904
Stainless	2	OCV2-SS2 R6D90T6	CV-O2 SS2 R6D906
Steel	4	OCV4-SS2 R6D90T6	CV-O4 SS2 R6D906
T-316	6	OCV6-SS2 R6D90T6	CV-O6 SS2 R6D906

A: 10.00"
Nominal Engagement: 3.5"

Outside Channel Vertical
45° Bend
0-3" Radius

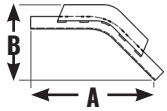

2" Wide

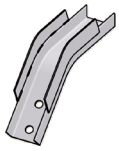

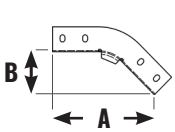

4-6" Wide

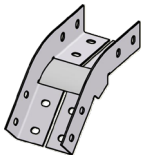

Includes 3/8" dia. bolting

Metal	Width	Part No.	Cover Part No.
Hot-Dip	2	OCV2-GC2-R3D45	CV-O2 MG2 R3D45
Galv.	4	OCV4-GC2-R3D45	CV-O4 MG2 R3D45
Steel*	6	OCV6-GC2-R3D45	CV-O6 MG2 R3D45
Natural	2	OCV2-NA2-R3D45	CV-O2 NA2 R3D45
Finish	4	OCV4-NA2-R3D45	CV-O4 NA2 R3D45
Alum.	6	OCV6-NA2-R3D45	CV-O6 NA2 R3D45
Stainless	2	OCV2-SS2 R3D45T4	CV-O2 SS2 R3D45T4
Steel	4	OCV4-SS2 R3D45T4	CV-O4 SS2 R3D45T4
T-304	6	OCV6-SS2 R3D45T4	CV-O6 SS2 R3D45T4
Stainless	2	OCV2-SS2 R3D45T6	CV-O2 SS2 R3D45T6
Steel	4	OCV4-SS2 R3D45T6	CV-O4 SS2 R3D45T6
T-316	6	OCV6-SS2 R3D45T6	CV-O6 SS2 R3D45T6

A: 10.9" **B: 4.5" for 2" width**
A: 9" **B: 3.75" for 4" and 6" widths**
Nominal Engagement: 3.5"

Outside Channel Vertical
45° Bend
6" Min. Radius

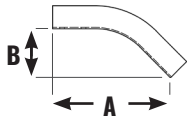

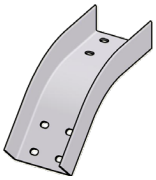

Includes 3/8" dia. bolting

Metal	Width	Part No.	Cover Part No.
Hot-Dip	2	OCV2-GC2-R6D45	CV-O2 MG2 R6D45
Galv.	4	OCV4-GC2-R6D45	CV-O4 MG2 R6D45
Steel*	6	OCV6-GC2-R6D45	CV-O6 MG2 R6D45
Natural	2	OCV2-NA2-R6D45	CV-O2 NA2 R6D45
Finish	4	OCV4-NA2-R6D45	CV-O4 NA2 R6D45
Alum.	6	OCV6-NA2-R6D45	CV-O6 NA2 R6D45
Stainless	2	OCV2-SS2 R6D45T4	CV-O2 SS2 R6D454
Steel	4	OCV4-SS2 R6D45T4	CV-O4 SS2 R6D454
T-304	6	OCV6-SS2 R6D45T4	CV-O6 SS2 R6D454
Stainless	2	OCV2-SS2 R6D45T6	CV-O2 SS2 R6D456
Steel	4	OCV4-SS2 R6D45T6	CV-O4 SS2 R6D456
T-316	6	OCV6-SS2 R6D45T6	CV-O6 SS2 R6D456

A: 15.25" **B: 6.25"**
Nominal Engagement: 3.5"

Outside Channel Vertical
Adjustable Bend (0-90°)
Patent No.: US 8,167,250 B2

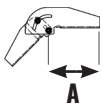

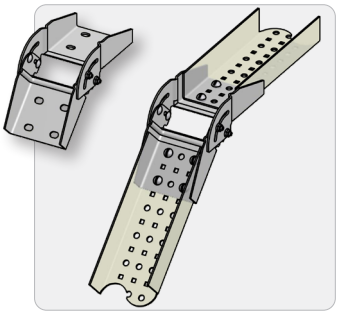

Includes 3/8" dia. bolting

Metal	Width	Part No.	Cover Part No.
Hot-Dip	2	OCV2-GC2-DA	-
Galv.	4	OCV4-GC2-DA	-
Steel	6	OCV6-GC2-DA	-
Natural	2	OCV2-NA2-DA	-
Finish	4	OCV4-NA2-DA	-
Alum.	6	OCV6-NA2-DA	-
Stainless	2	OCV2-SS2-DAT4	-
Steel	4	OCV4-SS2-DAT4	-
T-304	6	OCV6-SS2-DAT4	-
Stainless	2	OCV2-SS2-DAT6	-
Steel	4	OCV4-SS2-DAT6	-
T-316	6	OCV6-SS2-DAT6	-

A: 5.25"
Nominal Engagement: 3.5"

©2021 James C. White Co., Inc. CT2109

Offset Channel Vertical Double Adjustable Bend

Patent No.: US 8,167,250 B2

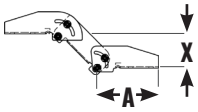

Includes 3/8” dia. bolting

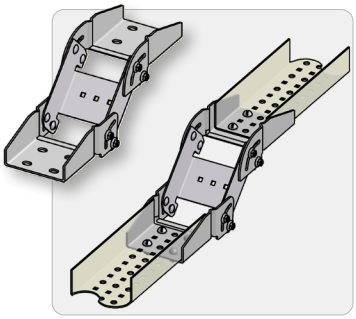

Metal	Width	Part No.	Cover Part No.
Hot-Dip	2	OCV2-GC2-DDA5	-
Galv.	4	OCV4-GC2-DDA5	-
Steel	6	OCV6-GC2-DDA5	-
Natural	2	OCV2-NA2-DDA5	-
Finish	4	OCV4-NA2-DDA5	-
Alum.	6	OCV6-NA2-DDA5	-
Stainless	2	OCV2-SS2-DDA5T4	-
Steel	4	OCV4-SS2-DDA5T4	-
T-304	6	OCV6-SS2-DDA5T4	-
Stainless	2	OCV2-SS2-DDA5T6	-
Steel	4	OCV4-SS2-DDA5T6	-
T-316	6	OCV6-SS2-DDA5T6	-

A: 6.0”
X: Offset at 45° (pictured): 3.25”
Max offset (bends at 90°): 5”
Nominal Engagement: 3.5”

©2021 James C. White Co., Inc. CT2109

Horizontal Drop-Out Fitting

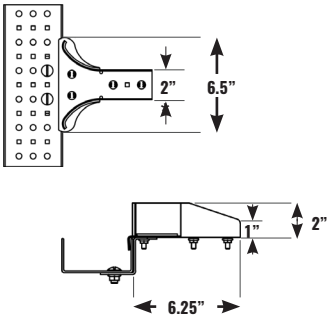

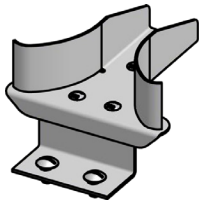

Metal	Width	Part No.
Stainless Steel T-304	2	DHC2-SS2-2T4
Stainless Steel T-316		-

Nominal Engagement: 3.5"

See pg. 31 for Horizontal Drop-Out Fitting for 1" deep tray

* Same width as standard 2" wide TUBETRACK® tray. Use with any CABLE-RACE® or TUBETRACK® fitting.

Attachable Horizontal Drop-Out Fitting

- Drop-Out to an instrumentation station or work station
- Bolt directly to any 2" deep TUBETRACK® 2", 4", or 6" wide tray
- No need to cut or modify existing mainline tray
- Drop-Out at any point along the TUBETRACK® main line tray
- Extend using any 2" wide CABLE-RACE® or TUBETRACK® tray fitting
- Use single Drop-Out fitting with a TUBETRACK® fitting for desired configuration
- All TUBETRACK® fittings include required fasteners
- Includes mounting bracket and fasteners for connection to 2" deep tray
- Available in stainless steel - fits TUBETRACK® tray of any metal

Examples of possible configurations using this single fitting for each Drop-Out:

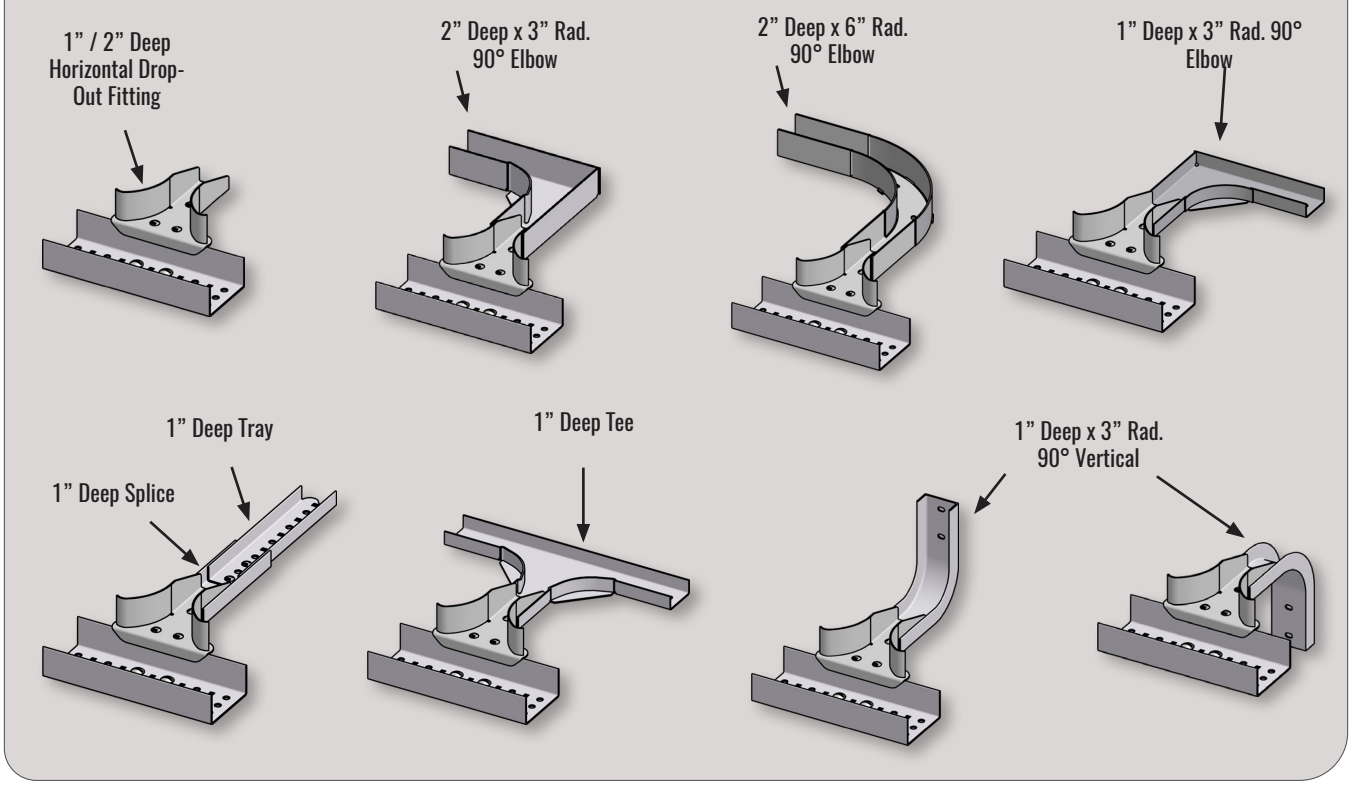

©2021 James C. White Co., Inc. CT2109

Classifications of channels, splices, bends, pg. 49
Safety-Related options, pg. 2

*Fittings are HDGF; Covers are mill-galvanized

Elbow Channel
90° Bend
12" Min. Radius

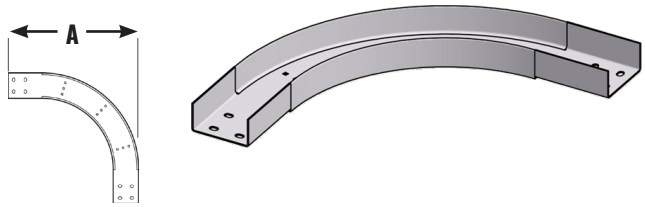

Includes 3/8" dia. bolting

Metal	Width	Part No.	Cover Part No.
Hot-Dip	2	EC2-GC2-R12D90	CV-E2 MG2 R12D90
Galv.	4	EC4-GC2-R12D90	CV-E4 MG2 R12D90
Steel*	6	EC6-GC2-R12D90	CV-E6 MG2 R12D90
Natural	2	EC2-NA2-R12D90	CV-E2 NA2 R12D90
Finish	4	EC4-NA2-R12D90	CV-E4 NA2 R12D90
Alum.	6	EC6-NA2-R12D90	CV-E6 NA2 R12D90
Stainless	2	EC2-SS2 R12D90T4	CV-E2 SS2 R12D904
Steel	4	EC4-SS2 R12D90T4	CV-E4 SS2 R12D904
T-304	6	EC6-SS2 R12D90T4	CV-E6 SS2 R12D904
Stainless	2	EC2-SS2 R12D90T6	CV-E2 SS2 R12D906
Steel	4	EC4-SS2 R12D90T6	CV-E4 SS2 R12D906
T-316	6	EC6-SS2 R12D90T6	CV-E6 SS2 R12D906

A: 18.00" plus channel width
Nominal Engagement: 3.5"
Larger radii available (18", 24", etc.)

Elbow Channel
45° Bend
12" Min. Radius

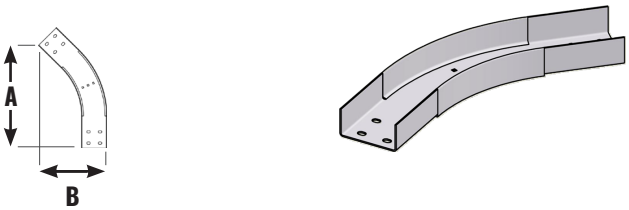

Includes 3/8" dia. bolting

Metal	Width	Part No.	Cover Part No.
Hot-Dip	2	EC2-GC2-R12D45	CV-E2 MG2 R12D45
Galv.	4	EC4-GC2-R12D45	CV-E4 MG2 R12D45
Steel*	6	EC6-GC2-R12D45	CV-E6 MG2 R12D45
Natural	2	EC2-NA2-R12D45	CV-E2 NA2 R12D45
Finish	4	EC4-NA2-R12D45	CV-E4 NA2 R12D45
Alum.	6	EC6-NA2-R12D45	CV-E6 NA2 R12D45
Stainless	2	EC2-SS2 R12D45T4	CV-E2 SS2 R12D454
Steel	4	EC4-SS2 R12D45T4	CV-E4 SS2 R12D454
T-304	6	EC6-SS2 R12D45T4	CV-E6 SS2 R12D454
Stainless	2	EC2-SS2 R12D45T6	CV-E2 SS2 R12D456
Steel	4	EC4-SS2 R12D45T6	CV-E4 SS2 R12D456
T-316	6	EC6-SS2 R12D45T6	CV-E6 SS2 R12D456

A: 18.0" **B: 8.0" plus channel width**
Nominal Engagement: 3.5"
Larger radii available (18", 24", etc.)

Tee Channel
90° Bend
12" Min. Radius

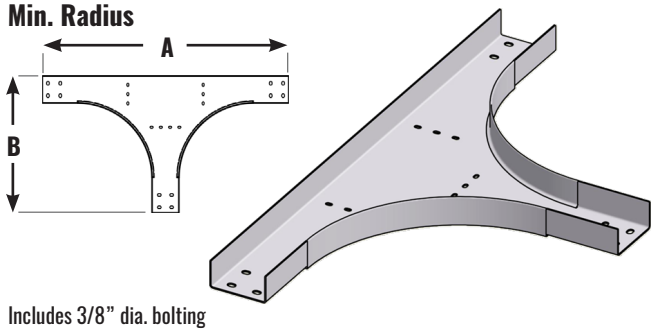

Includes 3/8" dia. bolting

Metal	Width	Part No.	Cover Part No.
Hot-Dip	2	TC2-GC2-R12D90	CV-T2 MG2 R12D90
Galv.	4	TC4-GC2-R12D90	CV-T4 MG2 R12D90
Steel*	6	TC6-GC2-R12D90	CV-T6 MG2 R12D90
Natural	2	TC2-NA2-R12D90	CV-T2 NA2 R12D90
Finish	4	TC4-NA2-R12D90	CV-T4 NA2 R12D90
Alum.	6	TC6-NA2-R12D90	CV-T6 NA2 R12D90
Stainless	2	TC2-SS2 R12D90T4	CV-T2 SS2 R12D904
Steel	4	TC4-SS2 R12D90T4	CV-T4 SS2 R12D904
T-304	6	TC6-SS2 R12D90T4	CV-T6 SS2 R12D904
Stainless	2	TC2-SS2 R12D90T6	CV-T2 SS2 R12D906
Steel	4	TC4-SS2 R12D90T6	CV-T4 SS2 R12D906
T-316	6	TC6-SS2 R12D90T6	CV-T6 SS2 R12D906

A: 35.5" plus channel width
B: 18.0" plus channel width
Nominal Engagement: 3.5"
Larger radii available (18", 24", etc.)

Cross Channel
90° Bend
12" Min.

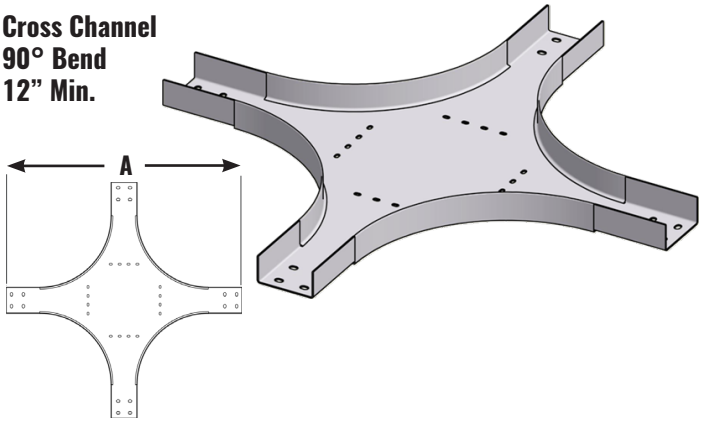

Includes 3/8" dia. bolting

Metal	Width	Part No.	Cover Part No.
Hot-Dip	2	KC2-GC2-R12D90	CV-K2 MG2 R12D90
Galv.	4	KC4-GC2-R12D90	CV-K4 MG2 R12D90
Steel*	6	KC6-GC2-R12D90	CV-K6 MG2 R12D90
Natural	2	KC2-NA2-R12D90	CV-K2 NA2 R12D90
Finish	4	KC4-NA2-R12D90	CV-K4 NA2 R12D90
Alum.	6	KC6-NA2-R12D90	CV-K6 NA2 R12D90
Stainless	2	KC2-SS2 R12D90T4	CV-K2 SS2 R12D904
Steel	4	KC4-SS2 R12D90T4	CV-K4 SS2 R12D904
T-304	6	KC6-SS2 R12D90T4	CV-K6 SS2 R12D904
Stainless	2	KC2-SS2 R12D90T6	CV-K2 SS2 R12D906
Steel	4	KC4-SS2 R12D90T6	CV-K4 SS2 R12D906
T-316	6	KC6-SS2 R12D90T6	CV-K6 SS2 R12D906

A: 35.5" plus channel width
Nominal Engagement: 3.5"
Larger radii available (18", 24", etc.)

©2021 James C. White Co., Inc. CT2109

Classifications of channels, splices, bends, pg. 49
Safety-Related options, pg. 2
*Fittings are HDGF; Covers are mill-galvanized

Inside Channel Vertical 90° Bend 14" Radius

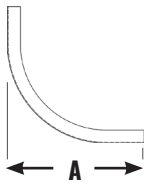

Includes 3/8" dia. bolting

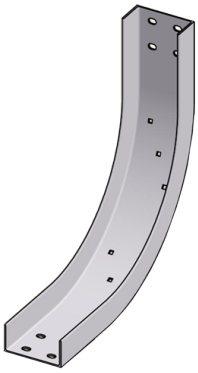

Metal	Width	Part No.	Cover Part No.
Hot-Dip	2	ICV2-GC2-R14D90	CV-I2 MG2 R14D90
Galv.	4	ICV4-GC2-R14D90	CV-I4 MG2 R14D90
Steel*	6	ICV6-GC2-R14D90	CV-I6 MG2 R14D90
Natural	2	ICV2-NA2-R14D90	CV-I2 NA2 R14D90
Finish	4	ICV4-NA2-R14D90	CV-I4 NA2 R14D90
Alum.	6	ICV6-NA2-R14D90	CV-I6 NA2 R14D90
Stainless	2	ICV2 SS2 R14D90T4	CV-I2 SS2 R14D904
Steel	4	ICV4 SS2 R14D90T4	CV-I4 SS2 R14D904
T-304	6	ICV6 SS2 R14D90T4	CV-I6 SS2 R14D904
Stainless	2	ICV2 SS2 R14D90T6	CV-I2 SS2 R14D906
Steel	4	ICV4 SS2 R14D90T6	CV-I4 SS2 R14D906
T-316	6	ICV6 SS2 R14D90T6	CV-I6 SS2 R14D906

A: 22.25"
Nominal Engagement: 3.5"
Larger radii available (18", 24", etc.)

Inside Channel Vertical 45° Bend 14" Radius

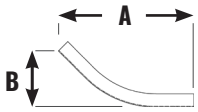

Includes 3/8" dia. bolting

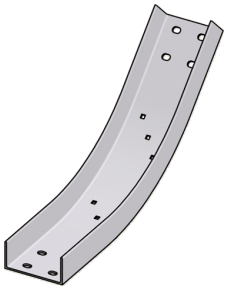

Metal	Width	Part No.	Cover Part No.
Hot-Dip	2	ICV2-GC2-R14D45	CV-I2 MG2 R14D45
Galv.	4	ICV4-GC2-R14D45	CV-I4 MG2 R14D45
Steel*	6	ICV6-GC2-R14D45	CV-I6 MG2 R14D45
Natural	2	ICV2-NA2-R14D45	CV-I2 NA2 R14D45
Finish	4	ICV4-NA2-R14D45	CV-I4 NA2 R14D45
Alum.	6	ICV6-NA2-R14D45	CV-I6 NA2 R14D45
Stainless	2	ICV2 SS2 R14D45T4	CV-I2 SS2 R14D454
Steel	4	ICV4 SS2 R14D45T4	CV-I4 SS2 R14D454
T-304	6	ICV6 SS2 R14D45T4	CV-I6 SS2 R14D454
Stainless	2	ICV2 SS2 R14D45T6	CV-I2 SS2 R14D456
Steel	4	ICV4 SS2 R14D45T6	CV-I4 SS2 R14D456
T-316	6	ICV6 SS2 R14D45T6	CV-I6 SS2 R14D456

A: 21.75" **B: 9.0"**
Nominal Engagement: 3.5"
Larger radii available (18", 24", etc.)

Outside Channel Vertical 90° Bend 12" Min. Radius

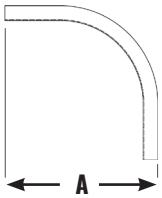

Includes 3/8" dia. bolting

Metal	Width	Part No.	Cover Part No.
Hot-Dip	2	OCV2-GC2-R12D90	CV-O2 MG2 R12D90
Galv.	4	OCV4-GC2-R12D90	CV-O4 MG2 R12D90
Steel*	6	OCV6-GC2-R12D90	CV-O6 MG2 R12D90
Natural	2	OCV2-NA2-R12D90	CV-O2 NA2 R12D90
Finish	4	OCV4-NA2-R12D90	CV-O4 NA2 R12D90
Alum.	6	OCV6-NA2-R12D90	CV-O6 NA2 R12D90
Stainless	2	OCV2 SS2 R12D90T4	CV-O2 SS2 R12D904
Steel	4	OCV4 SS2 R12D90T4	CV-O4 SS2 R12D904
T-304	6	OCV6 SS2 R12D90T4	CV-O6 SS2 R12D904
Stainless	2	OCV2 SS2 R12D90T6	CV-O2 SS2 R12D906
Steel	4	OCV4 SS2 R12D90T6	CV-O4 SS2 R12D906
T-316	6	OCV6 SS2 R12D90T6	CV-O6 SS2 R12D906

A: 20.00"
Nominal Engagement: 3.5" OR 5.5"
Larger radii available (18", 24", etc.)

Outside Channel Vertical 45° Bend 12" Min. Radius

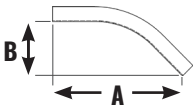

Includes 3/8" dia. bolting

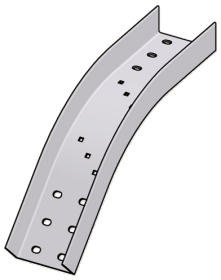

Metal	Width	Part No.	Cover Part No.
Hot-Dip	2	OCV2-GC2-R12D45	CV-O2 MG2 R12D45
Galv.	4	OCV4-GC2-R12D45	CV-O4 MG2 R12D45
Steel*	6	OCV6-GC2-R12D45	CV-O6 MG2 R12D45
Natural	2	OCV2-NA2-R12D45	CV-O2 NA2 R12D45
Finish	4	OCV4-NA2-R12D45	CV-O4 NA2 R12D45
Alum.	6	OCV6-NA2-R12D45	CV-O6 NA2 R12D45
Stainless	2	OCV2 SS2 R12D45T4	CV-O2 SS2 R12D454
Steel	4	OCV4 SS2 R12D45T4	CV-O4 SS2 R12D454
T-304	6	OCV6 SS2 R12D45T4	CV-O6 SS2 R12D454
Stainless	2	OCV2 SS2 R12D45T6	CV-O2 SS2 R12D456
Steel	4	OCV4 SS2 R12D45T6	CV-O4 SS2 R12D456
T-316	6	OCV6 SS2 R12D45T6	CV-O6 SS2 R12D456

A: 22.0"" B: 9.0"
Nominal Engagement: 3.5" or 5.5"
Larger radii available (18", 24", etc.)

©2021 James C. White Co., Inc. CT2109

Channel End Cover

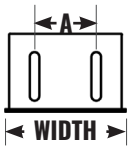

Includes 1/4" dia. bolting

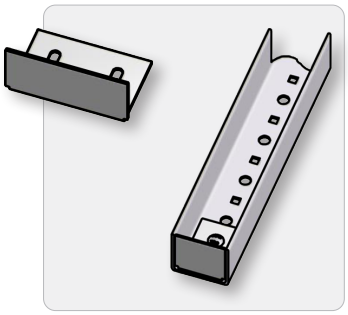

Metal	Width	A	Part No.
Stainless Steel T-304	2	0	CVE-CH2SS2T4
	4	2	CVE-CH4SS2T4
	6	4	CVE-CH6SS2T4
Stainless Steel T-316	2	0	-
	4	2	-
	6	4	-

Channel End Covers are used where there is a requirement to enclose the end of a TUBETRACK® tray. TUBETRACK® End Covers are adjustable to make flush with the end of the tray.

Reduction Guide

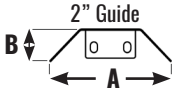

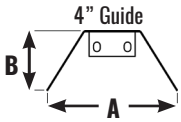

Includes 3/8" dia. bolting

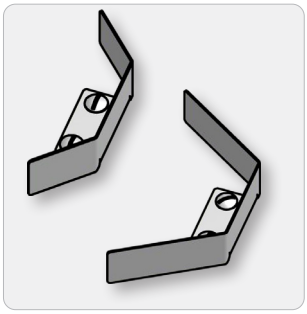

Metal	Width	A	B	Part No.
Stainless Steel T-304	2	7.3"	2"	REG2SS2-T4RHLH
	4	8.5"	4"	REG4SS2-T4RHLH
Stainless Steel T-316	2	7.3"	2"	-
	4	8.5"	4"	-

Use with standard TUBETRACK® splice fittings. Reduction Guides are adjustable to a desired flange alignment. Each deflector can be used for either right hand or left hand reduction. Fasteners included with each Reduction Guide.

Channel & Fitting Cover Clamps

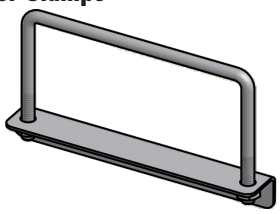

Sold Separately from Cover

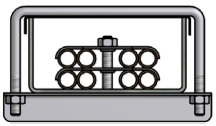

- Clamp: CCC4-SS4-2
- Channel: 4" x 2"

Channel Width	Channel Depth	Part No. Cover Clamp for Channel	Part No. Cover Clamp for Fittings
2	2	CCC2-SS4-2	FCC2-SS4-2
4		CCC4-SS4-2	FCC4-SS4-2
6		CCC6-SS4-2	FCC6-SS4-2

Four piece set includes base, U-bolt, and two hex flange nuts, all in 300 series stainless steel. Straight length covers (10 ft. and 12 ft. long) usually require three Channel Cover Clamps ("CCC"), and fitting covers usually require one Fitting Cover Clamp ("FCC") per end. Bases are marked with "C" or "F" to indicate Channel or Fitting.
Also available in 316 Stainless Steel - contact Factory.

Examples of Reduction Options:

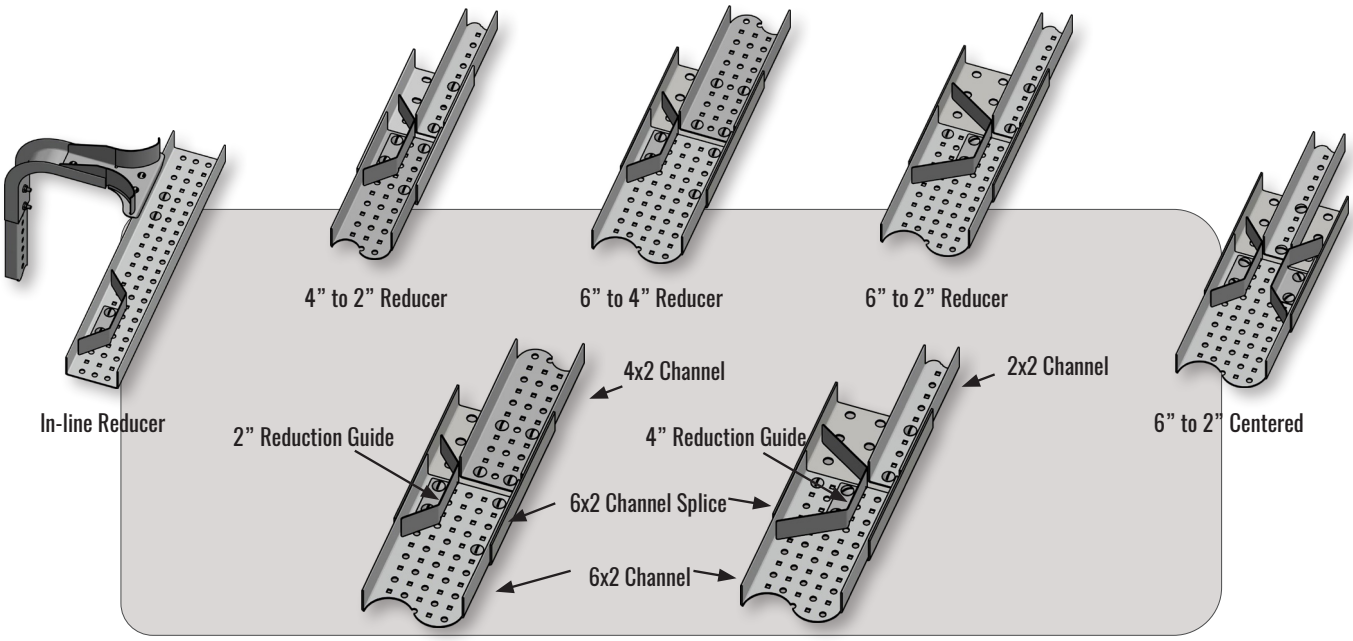

Classifications of channels, splices, bends, pg. 49
Safety-Related options, pg. 2

©2021 James C. White Co., Inc. CT2109

1" Deep Channel Tray

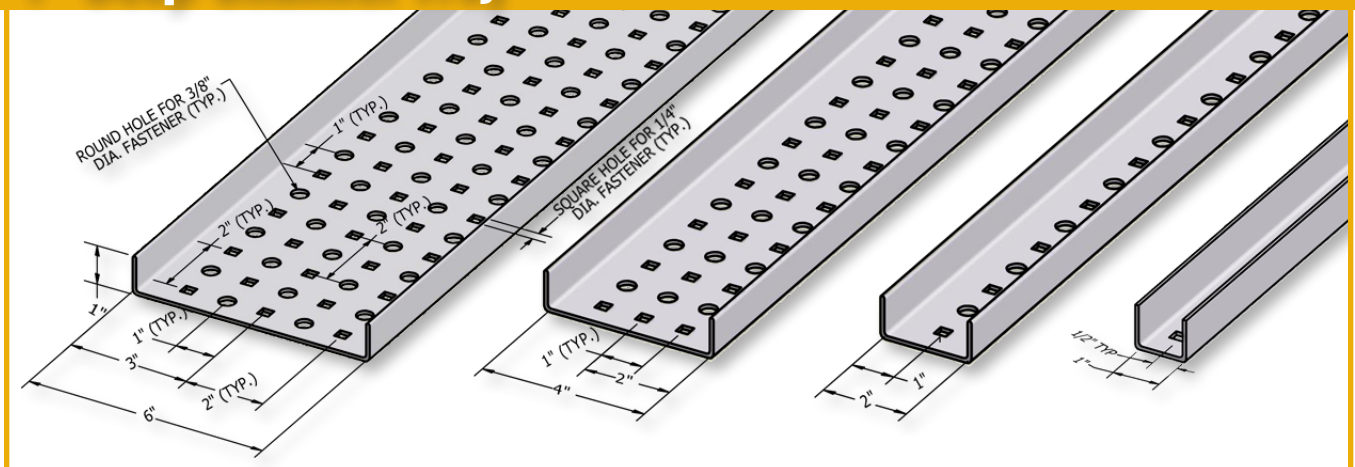

6" Inside Width | 4" Inside Width | 2" Inside Width | 1" Inside Width

Channel Tray - 1" Deep

1" deep TUBETRACK® channel tray matches the widths and metals of our heavier 2" deep channel tray. Metal gages are lighter for some of the 1" deep channel members. Channel tray details are shown for standard part numbers, materials, widths, lengths, gages, and covers.

The punch patterns for 1" deep and 2" deep channel trays are identical, except that the initial hole for 1" deep channel is a square hole for a 1/4" dia. fastener to match the hole pattern of TUBETRACK® splice and bend fittings. The hole pattern in 1" deep TUBETRACK® channel is compatible with 2" deep fittings by using round holes and the 3/8" dia. fasteners provided with each TUBETRACK® 2" deep fitting.
See page 50 for Load and Deflection information.

NOTE: 1" wide Stainless Steel TUBETRACK® is not UL Classified.

Metal	Width	Channel Tray Part No.	Chan. Gage	Chan. Length	Cover Part No.	Cover Length
Hot-Dip Galv. Steel*	1	CH1-GC1	14	20'	CV-CH1-MG	10'
	2	CH2-GC1	14		CV-CH2-MG	
	4	CH4-GC1	14		CV-CH4-MG	
	6	CH6-GC1-144	14	12'	CV-CH6-MG-144	12'
Natural Finish Alum.	1	CH1-NA1	14	20'	CV-CH1-NA	10'
	2	CH2-NA1-144	14	12'	CV-CH2-NA	12'
	4	CH4-NA1-144			CV-CH4-NA	
	6	CH6-NA1-144			CV-CH6-NA-144	
Stainless Steel T-304	1	CH1-SS1T4-144-6	16	12'	CV-CH1-SS4-144	12'
	2	CH2-SS1T4-144-6			CV-CH2-SS4-144	
	4	CH4-SS1T4-144-6			CV-CH4-SS4-144	
	6	CH6-SS1T4-144-6			CV-CH6-SS4-144	
Stainless Steel T-316	1	CH1-SS1T6-144-6	16	12'	CV-CH1-SS6-144	12'
	2	CH2-SS1T6-144-6			CV-CH2-SS6-144	
	4	CH4-SS1T6-144-6			CV-CH4-SS6-144	
	6	CH6-SS1T6-144-6			CV-CH6-SS6-144	

Structural connections for 1" deep TUBETRACK® tray, splices, and bends are provided with 1/4" dia. bolt sets (JCWCO tubing bolts with flanged locking nuts). Tubing bolts with hex nuts and flat washers are optional upon request. Bolt sets are supplied with all TUBETRACK® splices and bends. Standard fastener metals include:

- Zinc-plated bolts with galvanized fittings
- 18-8 stainless bolts with aluminum fittings
- 18-8 stainless bolts with 304 SS fittings
- 316 stainless bolts with 316 SS fittings

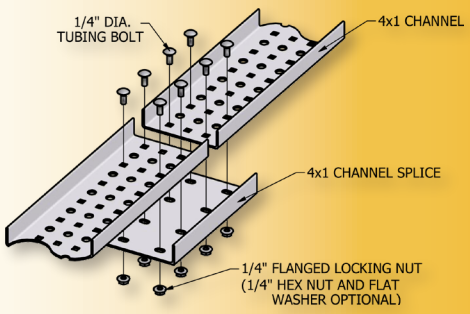

Bolted Connections

Drawing shows JCWCO standard splice connection for 1" deep channels. Bolts are JCWCO standard 1/4"-20 tubing bolts, 0.50" long with special short carriage square that fits the square holes of the channel.

TUBETRACK® uses only tightenable fasteners to secure tray connections and maintain the conductivity necessary for UL classification. Bolt sets are supplied with each TUBETRACK® splice and bend. Stainless Steel bolting is standard with aluminum TUBETRACK®. Stainless Steel bolting is optional with galvanized TUBETRACK® for an additional cost. Contact factory for additional information.

Classifications of channels, splices, bends, pg. 49

*Fittings are HDGF; Covers are mill-galvanized

©2021 James C. White Co., Inc. CT2109

Channel Splice

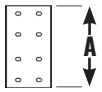

Includes 1/4” dia. bolting

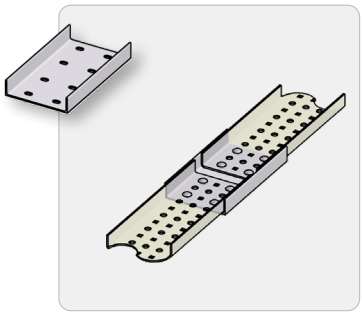

Metal	Width	Part No.	Cover Part No.
Hot-Dip Galv. Steel*	1	SC1-GC1	CV-S1MG1
	2	SC2-GC1	CV-S2MG1
	4	SC4-GC1	CV-S4MG1
	6	SC6-GC1	CV-S6MG1
Natural Finish Alum.	1	SC1-NA1	CV-S1NA1
	2	SC2-NA1	CV-S2NA1
	4	SC4-NA1	CV-S4NA1
	6	SC6-NA1	CV-S6NA1
Stainless Steel T-304	1	SC1-SS1T4	CV-S1SS1T4
	2	SC2-SS1T4	CV-S2SS1T4
	4	SC4-SS1T4	CV-S4SS1T4
	6	SC6-SS1T4	CV-S6SS1T4
Stainless Steel T-316	1	SC1-SS1T6	CV-S1SS1T6
	2	SC2-SS1T6	CV-S2SS1T6
	4	SC4-SS1T6	CV-S4SS1T6
	6	SC6-SS1T6	CV-S6SS1T6

A: 7.88”
Nominal Engagement: 3.5”

Transition Splice Right Hand

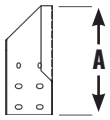

Includes 3/8” dia. bolting (same part as 2” deep, pg. 15). Cut channels so that round holes are on the end of the channel.

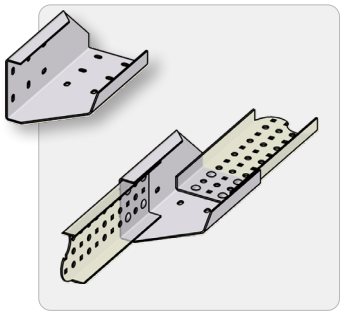

Metal	Width	Part No.	Cover Part No.
Hot-Dip Galv. Steel*	2	SCT2-GC2-RH	-
	4	SCT4-GC2-RH	-
	6	SCT6-GC2-RH	-
Natural Finish Alum.	2	SCT2-NA2-RH	-
	4	SCT4-NA2-RH	-
	6	SCT6-NA2-RH	-
Stainless Steel T-304	2	SCT2-SS2T4-RH	-
	4	SCT4-SS2T4-RH	-
	6	SCT6-SS2T4-RH	-
Stainless Steel T-316	2	SCT2-SS2T6-RH	-
	4	SCT4-SS2T6-RH	-
	6	SCT6-SS2T6-RH	-

A: 10.50”
Nominal Engagement: 3.5”
Transition Splices are marked with “L” or “R” to indicate Left or Right

Transition Splice Left Hand

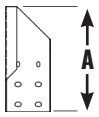

Includes 3/8” dia. bolting (same part as 2” deep, pg. 15). Cut channels so that round holes are on the end of the channel.

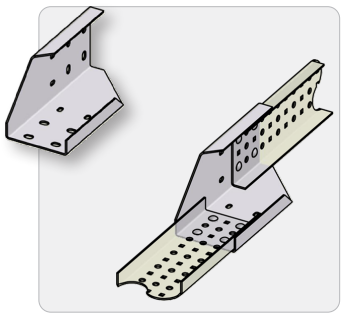

Metal	Width	Part No.	Cover Part No.
Hot-Dip Galv. Steel*	2	SCT2-GC2-LH	-
	4	SCT4-GC2-LH	-
	6	SCT6-GC2-LH	-
Natural Finish Alum.	2	SCT2-NA2-LH	-
	4	SCT4-NA2-LH	-
	6	SCT6-NA2-LH	-
Stainless Steel T-304	2	SCT2-SS2T4-LH	-
	4	SCT4-SS2T4-LH	-
	6	SCT6-SS2T4-LH	-
Stainless Steel T-316	2	SCT2-SS2T6-LH	-
	4	SCT4-SS2T6-LH	-
	6	SCT6-SS2T6-LH	-

A: 10.50”
Nominal Engagement: 3.5”
Transition Splices are marked with “L” or “R” to indicate Left or Right

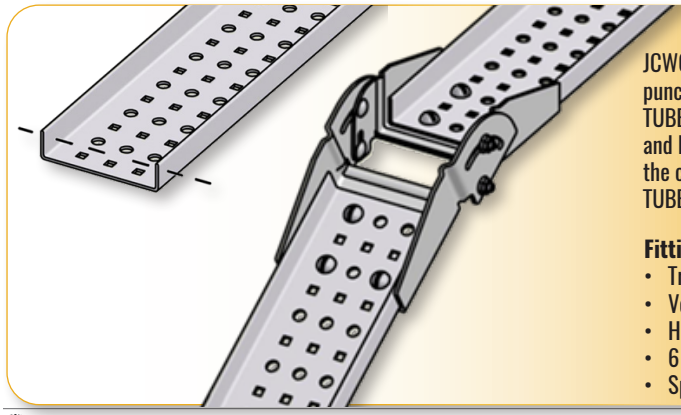

Matching Punch Patterns (1” and 2” deep channels)

JCWCO 1” deep channels will fit with splices and bends for 2” deep channels. The punch patterns of the two tray depths are the same except for the starting holes in TUBETRACK® stock tray sections. To connect 1” deep channels to 2” deep splices and bends with 3/8” bolting, cut 1” deep tray channels so that round holes are on the connecting ends to accommodate the 3/8” bolting provided with the specific TUBETRACK® fitting.

Fittings with universal 3/8” bolting include:

- Transition splices
- Vertical adjustable bends (shown left)
- Horizontal adjustable bends
- 6” or 12” radius bends
- Special 18”, 24” or larger radius bends

Classifications of channels, splices, bends, pg. 49

*Fittings are HDGF; Covers are mill-galvanized

©2021 James C. White Co., Inc. CT2109

Elbow Channel
90° Bend
3" Min. Radius

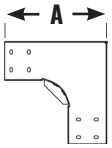

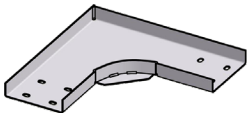

Includes 1/4" dia. bolting

Metal	Width	Part No.	Cover Part No.
Hot-Dip Galv. Steel*	1	EC1-GC1-R3D90	-
	2	EC2-GC1-R3D90	CV-E2MG2 R3D90
	4	EC4-GC1-R3D90	CV-E4MG2 R3D90
	6	EC6-GC1-R3D90	CV-E6MG2 R3D90
Natural Finish Alum.	1	EC1-NA1-R3D90	-
	2	EC2-NA1-R3D90	CV-E2NA2 R3D90
	4	EC4-NA1-R3D90	CV-E4NA2 R3D90
	6	EC6-NA1-R3D90	CV-E6NA2 R3D90
Stainless Steel T-304	1	EC1-SS1-R3D90T4	-
	2	EC2-SS1-R3D90T4	CV-E2SS2 R3D90T4
	4	EC4-SS1-R3D90T4	CV-E4SS2 R3D90T4
	6	EC6-SS1-R3D90T4	CV-E6SS2 R3D90T4
Stainless Steel T-316	1	EC1-SS1-R3D90T6	-
	2	EC2-SS1-R3D90T6	CV-E2SS2 R3D90T6
	4	EC4-SS1-R3D90T6	CV-E4SS2 R3D90T6
	6	EC6-SS1-R3D90T6	CV-E6SS2 R3D90T6

A: 7.25" plus channel width
Nominal Engagement: 3.5"

Elbow Channel
45° Bend
3" Min. Radius

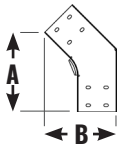

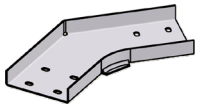

Includes 1/4" dia. bolting

Metal	Width	Part No.	Cover Part No.
Hot-Dip Galv. Steel*	1	EC1-GC1-R3D45	-
	2	EC2-GC1-R3D45	CV-E2MG2 R3D45
	4	EC4-GC1-R3D45	CV-E4MG2 R3D45
	6	EC6-GC1-R3D45	CV-E6MG2 R3D45
Natural Finish Alum.	1	EC1-NA1-R3D45	-
	2	EC2-NA1-R3D45	CV-E2NA2 R3D45
	4	EC4-NA1-R3D45	CV-E4NA2 R3D45
	6	EC6-NA1-R3D45	CV-E6NA2 R3D45
Stainless Steel T-304	1	EC1-SS1-R3D45T4	-
	2	EC2-SS1-R3D45T4	CV-E2SS2 R3D45T4
	4	EC4-SS1-R3D45T4	CV-E4SS2 R3D45T4
	6	EC6-SS1-R3D45T4	CV-E6SS2 R3D45T4
Stainless Steel T-316	1	EC1-SS1-R3D45T6	-
	2	EC2-SS1-R3D45T6	CV-E2SS2 R3D45T6
	4	EC4-SS1-R3D45T6	CV-E4SS2 R3D45T6
	6	EC6-SS1-R3D45T6	CV-E6SS2 R3D45T6

A: 8.9" **B: 4.0" plus channel width**
Nominal Engagement: 3.5"

Horizontal Elbow
Adjustable Bend (0-90°)
Patent No.: US 8,573,409 B2
3" Min. Radius

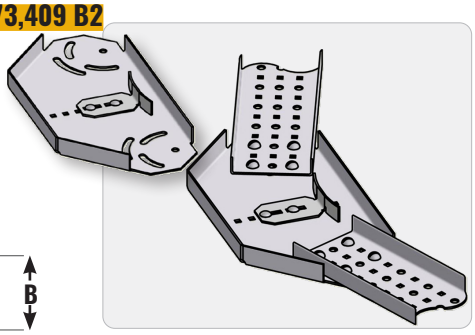

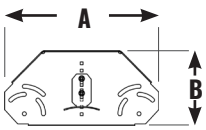

Includes 3/8" dia. bolts and locking nuts. Cut tray channels so that round holes are on the connecting ends.

Metal	Width	Part No.	Cover Part No.
Hot-Dip Galv. Steel	1	EC1-GC1-R3DA	-
	2	EC2-GC1-R3DA	-
	4	EC4-GC1-R3DA	-
	6	EC6-GC1-R3DA	-
Natural Finish Alum.	1	EC1-NA1-R3DA	-
	2	EC2-NA1-R3DA	-
	4	EC4-NA1-R3DA	-
	6	EC6-NA1-R3DA	-
Stainless Steel T-304	1	EC1-SS1-R3DAT4	-
	2	EC2-SS1-R3DAT4	-
	4	EC4-SS1-R3DAT4	-
	6	EC6-SS1-R3DAT4	-
Stainless Steel T-316	1	EC1-SS1-R3DAT6	-
	2	EC2-SS1-R3DAT6	-
	4	EC4-SS1-R3DAT6	-
	6	EC6-SS1-R3DAT6	-

2" Width Tray: A = 11", B = 7" (nominal dim.)
4" Width Tray: A = 14", B = 8" (nominal dim.)
6" Width Tray: A = 14", B = 10" (nominal dim.)
Nominal Engagement: 3.5"

©2021 James C. White Co., Inc. CT2109

Classifications of channels, splices, bends, pg. 49

*Fittings are HDGF; Covers are mill-galvanized

Tee Channel
90° Bend
3” Min. Radius

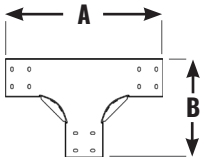

Includes 1/4” dia. bolting

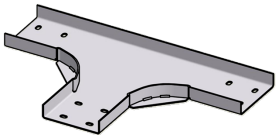

Metal	Width	Part No.	Cover Part No.
Hot-Dip Galv. Steel*	1	TC1-GC1-R3D90	-
	2	TC2-GC1-R3D90	CV-T2MG2 R3D90
	4	TC4-GC1-R3D90	CV-T4MG2 R3D90
	6	TC6-GC1-R3D90	CV-T6MG2 R3D90
Natural Finish Alum.	1	TC1-NA1-R3D90	-
	2	TC2-NA1-R3D90	CV-T2NA2 R3D90
	4	TC4-NA1-R3D90	CV-T4NA2 R3D90
	6	TC6-NA1-R3D90	CV-T6NA2 R3D90
Stainless Steel T-304	1	TC1-SS1-R3D90T4	-
	2	TC2-SS1-R3D90T4	CV-T2SS2 R3D90T4
	4	TC4-SS1-R3D90T4	CV-T4SS2 R3D90T4
	6	TC6-SS1-R3D90T4	CV-T6SS2 R3D90T4
Stainless Steel T-316	1	TC1-SS1-R3D90T6	-
	2	TC2-SS1-R3D90T6	CV-T2SS2 R3D90T6
	4	TC4-SS1-R3D90T6	CV-T4SS2 R3D90T6
	6	TC6-SS1-R3D90T6	CV-T6SS2 R3D90T6

A: 14.25” plus channel width
B: 7.25” plus channel width
Nominal Engagement: 3.5”

Cross Channel
90° Bend
3” Min. Radius

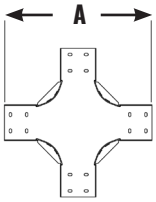

Includes 1/4” dia. bolting

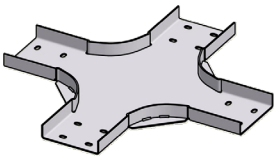

Metal	Width	Part No.	Cover Part No.
Hot-Dip Galv. Steel*	1	KC1-GC1-R3D90	-
	2	KC2-GC1-R3D90	CV-K2MG2 R3D90
	4	KC4-GC1-R3D90	CV-K4MG2 R3D90
	6	KC6-GC1-R3D90	CV-K6MG2 R3D90
Natural Finish Alum.	1	KC1-NA1-R3D90	-
	2	KC2-NA1-R3D90	CV-K2NA2 R3D90
	4	KC4-NA1-R3D90	CV-K4NA2 R3D90
	6	KC6-NA1-R3D90	CV-K6NA2 R3D90
Stainless Steel T-304	1	KC1-SS1-R3D90T4	-
	2	KC2-SS1-R3D90T4	CV-K2SS2 R3D90T4
	4	KC4-SS1-R3D90T4	CV-K4SS2 R3D90T4
	6	KC6-SS1-R3D90T4	CV-K6SS2 R3D90T4
Stainless Steel T-316	1	KC1-SS1-R3D90T6	-
	2	KC2-SS1-R3D90T6	CV-K2SS2 R3D90T6
	4	KC4-SS1-R3D90T6	CV-K4SS2 R3D90T6
	6	KC6-SS1-R3D90T6	CV-K6SS2 R3D90T6

A: 14.25” plus channel width
Nominal Engagement: 3.5”

Square Inside Channel Vertical
90° Bend
0-3” Radius

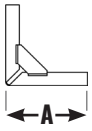

Includes 1/4” dia. bolting

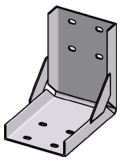

Metal	Width	Part No.	Cover Part No.
Hot-Dip Galv. Steel*	1	SICV1-GC1-D90	-
	2	SICV2-GC1-D90	CV-I2MG2 R3D90
	4	SICV4-GC1-D90	CV-I4MG2 R3D90
	6	SICV6-GC1-D90	CV-I6MG2 R3D90
Natural Finish Alum.	1	SICV1-NA1-D90	-
	2	SICV2-NA1-D90	CV-I2NA2 R3D90
	4	SICV4-NA1-D90	CV-I4NA2 R3D90
	6	SICV6-NA1-D90	CV-I6NA2 R3D90
Stainless Steel T-304	1	SICV1-SS1-D90T4	-
	2	SICV2-SS1-D90T4	CV-I2SS2 R3D90T4
	4	SICV4-SS1-D90T4	CV-I4SS2 R3D90T4
	6	SICV6-SS1-D90T4	CV-I6SS2 R3D90T4
Stainless Steel T-316	1	SICV1-SS1-D90T6	-
	2	SICV2-SS1-D90T6	CV-I2SS2 R3D90T6
	4	SICV4-SS1-D90T6	CV-I4SS2 R3D90T6
	6	SICV6-SS1-D90T6	CV-I6SS2 R3D90T6

A: 6.5”
Nominal Engagement: 3.5”

©2021 James C. White Co., Inc. CT2109

Classifications of channels, splices, bends, pg. 49

*Fittings are HDGF; Covers are mill-galvanized

Horizontal Drop-Out Fitting

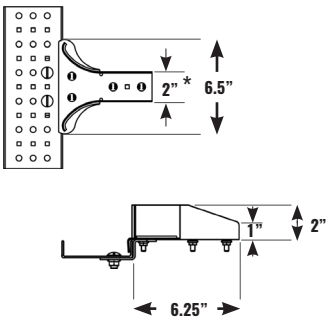

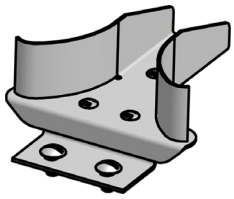

Metal	Width	Part No.
Stainless Steel T-304	2	DHC2-SS2-1T4
Stainless Steel T-316		-

Nominal Engagement: 3.5”

See pg. 23 for Horizontal Drop-Out Fitting for 2” deep tray

* Same width as standard 2” wide TUBETRACK® tray. Use with any CABLE-RACE® or TUBETRACK® fitting.

Attachable Horizontal Drop-Out Fitting

- Drop-Out to an instrumentation station or work station
- Bolt directly to any 1” deep TUBETRACK® 2”, 4”, or 6” wide tray
- No need to cut or modify existing mainline tray
- Drop-Out at any point along the TUBETRACK® main line tray
- Extend using any 2” wide CABLE-RACE® or TUBETRACK® tray fitting
- Use single Drop-Out fitting with a TUBETRACK® fitting for desired configuration
- All TUBETRACK® fittings include required fasteners
- Includes mounting bracket and fasteners for connection to 1” deep tray
- Available in stainless steel - fits TUBETRACK® tray of any metal

Examples of possible configurations using this single fitting for each Drop-Out:

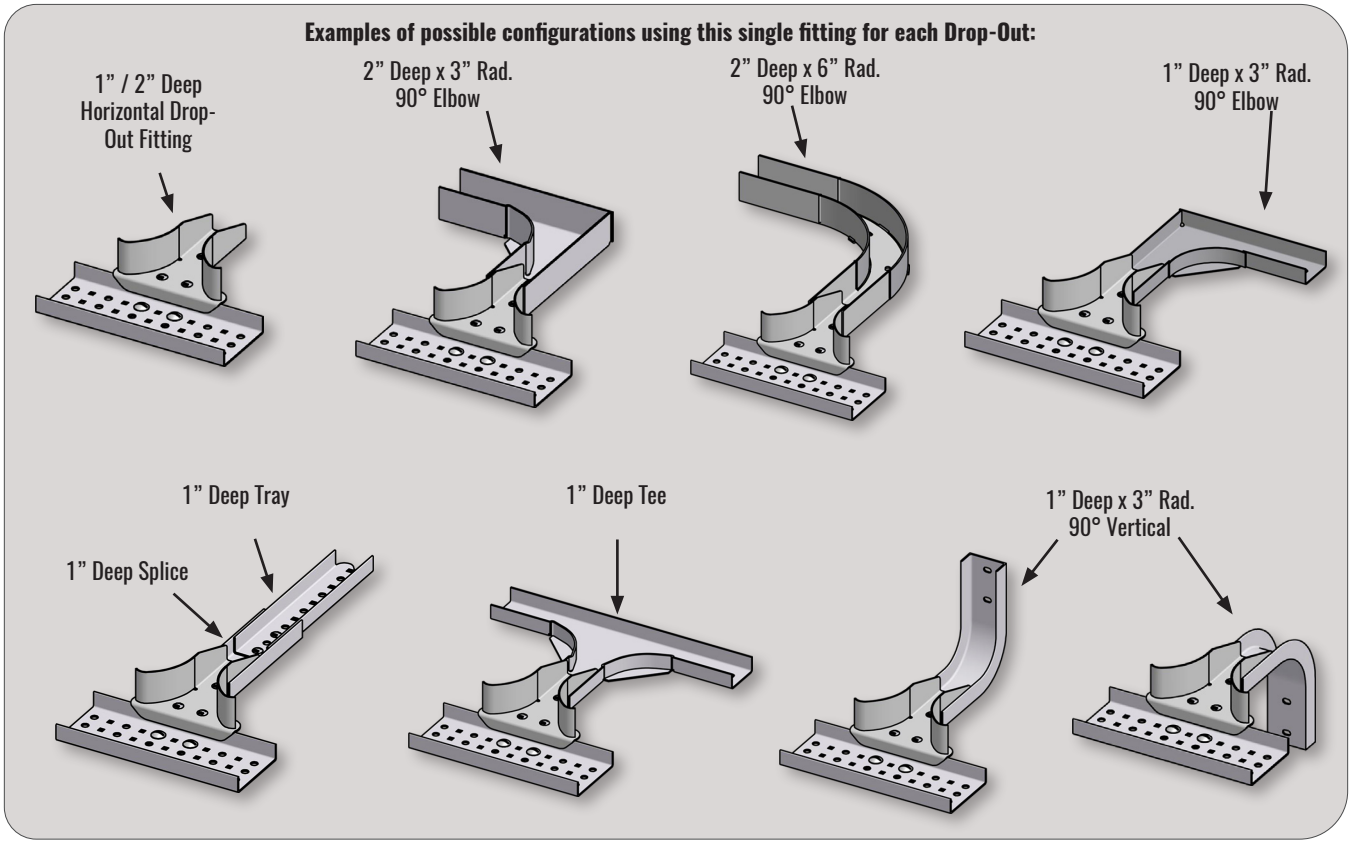

©2021 James C. White Co., Inc. CT2109

Classifications of channels, splices, bends, pg. 49

*Fittings are HDGF; Covers are mill-galvanized

Inside Channel Vertical 90° Bend 3” Radius

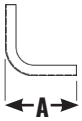

Includes 1/4” dia. bolting

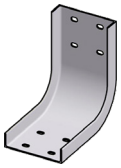

Metal	Width	Part No.	Cover Part No.
Hot-Dip Galv. Steel*	1	ICV1-GC1-R3D90	-
	2	ICV2-GC1-R3D90	CV-I2MG1 R3D90
	4	ICV4-GC1-R3D90	CV-I4MG1 R3D90
	6	ICV6-GC1-R3D90	CV-I6MG1 R3D90
Natural Finish Alum.	1	ICV1-NA1-R3D90	-
	2	ICV2-NA1-R3D90	CV-I2NA1 R3D90
	4	ICV4-NA1-R3D90	CV-I4NA1 R3D90
	6	ICV6-NA1-R3D90	CV-I6NA1 R3D90
Stainless Steel T-304	1	ICV1-SS1 R3D90T4	-
	2	ICV2-SS1 R3D90T4	CV-I2SS1 R3D90T4
	4	ICV4-SS1 R3D90T4	CV-I4SS1 R3D90T4
	6	ICV6-SS1 R3D90T4	CV-I6SS1 R3D90T4
Stainless Steel T-316	1	ICV1-SS1 R3D90T6	-
	2	ICV2-SS1 R3D90T6	CV-I2SS1 R3D90T6
	4	ICV4-SS1 R3D90T6	CV-I4SS1 R3D90T6
	6	ICV6-SS1 R3D90T6	CV-I6SS1 R3D90T6

A: 7.25”
Nominal Engagement: 3.5”

Inside Channel Vertical 45° Bend 3” Radius

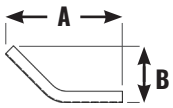

Includes 1/4” dia. bolting

Metal	Width	Part No.	Cover Part No.
Hot-Dip Galv. Steel*	1	ICV1-GC1-R3D45	-
	2	ICV2-GC1-R3D45	CV-I2MG1 R3D45
	4	ICV4-GC1-R3D45	CV-I4MG1 R3D45
	6	ICV6-GC1-R3D45	CV-I6MG1 R3D45
Natural Finish Alum.	1	ICV1-NA1-R3D45	-
	2	ICV2-NA1-R3D45	CV-I2NA1 R3D45
	4	ICV4-NA1-R3D45	CV-I4NA1 R3D45
	6	ICV6-NA1-R3D45	CV-I6NA1 R3D45
Stainless Steel T-304	1	ICV1-SS1 R3D45T4	-
	2	ICV2-SS1 R3D45T4	CV-I2SS1 R3D45T4
	4	ICV4-SS1 R3D45T4	CV-I4SS1 R3D45T4
	6	ICV6-SS1 R3D45T4	CV-I6SS1 R3D45T4
Stainless Steel T-316	1	ICV1-SS1 R3D45T6	-
	2	ICV2-SS1 R3D45T6	CV-I2SS1 R3D45T6
	4	ICV4-SS1 R3D45T6	CV-I4SS1 R3D45T6
	6	ICV6-SS1 R3D45T6	CV-I6SS1 R3D45T6

A: 10.75” **B: 4.5”**
Nominal Engagement: 3.5”

Inside Channel Vertical Adjustable Bend (0-90°)
Patent No.: US 8,167,250 B2

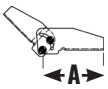

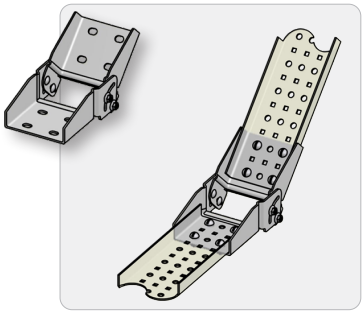

Metal	Width	Part No.	Cover Part No.
Hot-Dip Galv. Steel	2	ICV2-GC2-DA	-
	4	ICV4-GC2-DA	-
	6	ICV6-GC2-DA	-
Natural Finish Alum.	2	ICV2-NA2-DA	-
	4	ICV4-NA2-DA	-
	6	ICV6-NA2-DA	-
Stainless Steel T-304	2	ICV2-SS2-DAT4	-
	4	ICV4-SS2-DAT4	-
	6	ICV6-SS2-DAT4	-
Stainless Steel T-316	2	ICV2-SS2-DAT6	-
	4	ICV4-SS2-DAT6	-
	6	ICV6-SS2-DAT6	-

A: 6”
Nominal Engagement: 3.5”

Includes 3/8” dia. bolting (same part as 2” deep, page 20). Cut channels so that round holes are on the connecting end.

©2021 James C. White Co., Inc. CT2109

Square Outside Channel Vertical
90° Bend
0-3" Radius

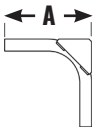

Includes 1/4" dia. bolting

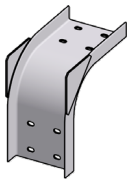

Metal	Width	Part No.	Cover Part No.
Hot-Dip Galv. Steel*	1	SOCV1-GC1-R3D90	-
	2	SOCV2-GC1-R3D90	CV-O2MG2 R3D90
	4	SOCV4-GC1-R3D90	CV-O4MG2 R3D90
	6	SOCV6-GC1-R3D90	CV-O6MG2 R3D90
Natural Finish Alum.	1	SOCV1-NA1-R3D90	-
	2	SOCV2-NA1-R3D90	CV-O2NA2 R3D90
	4	SOCV4-NA1-R3D90	CV-O4NA2 R3D90
	6	SOCV6-NA1-R3D90	CV-O6NA2 R3D90
Stainless Steel T-304	1	SOCV1 SS1 R3D90T4	-
	2	SOCV2 SS1 R3D90T4	CV-O2SS2 R3D90T4
	4	SOCV4 SS1 R3D90T4	CV-O4SS2 R3D90T4
	6	SOCV6 SS1 R3D90T4	CV-O6SS2 R3D90T4
Stainless Steel T-316	1	SOCV1 SS1 R3D90T6	-
	2	SOCV2 SS1 R3D90T6	CV-O2SS2 R3D90T6
	4	SOCV4 SS1 R3D90T6	CV-O4SS2 R3D90T6
	6	SOCV6 SS1 R3D90T6	CV-O6SS2 R3D90T6

A: 8.0"
Nominal Engagement: 3.5"

Outside Channel Vertical
90° Bend
3" Min. Radius

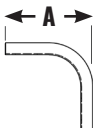

Includes 1/4" dia. bolting

Metal	Width	Part No.	Cover Part No.
Hot-Dip Galv. Steel*	1	OCV1-GC1-R3D90	-
	2	OCV2-GC1-R3D90	CV-O2MG1 R3D90
	4	OCV4-GC1-R3D90	CV-O4MG1 R3D90
	6	OCV6-GC1-R3D90	CV-O6MG1 R3D90
Natural Finish Alum.	1	OCV1-NA1-R3D90	-
	2	OCV2-NA1-R3D90	CV-O2NA1 R3D90
	4	OCV4-NA1-R3D90	CV-O4NA1 R3D90
	6	OCV6-NA1-R3D90	CV-O6NA1 R3D90
Stainless Steel T-304	1	OCV1-SS1 R3D90T4	-
	2	OCV2-SS1 R3D90T4	CV-O2SS1 R3D90T4
	4	OCV4-SS1 R3D90T4	CV-O4SS1 R3D90T4
	6	OCV6-SS1 R3D90T4	CV-O6SS1 R3D90T4
Stainless Steel T-316	1	OCV1-SS1 R3D90T6	-
	2	OCV2-SS1 R3D90T6	CV-O2SS1 R3D90T6
	4	OCV4-SS1 R3D90T6	CV-O4SS1 R3D90T6
	6	OCV6-SS1 R3D90T6	CV-O6SS1 R3D90T6

A: 8.0"
Nominal Engagement: 3.5"

Outside Channel Vertical
45° Bend
3" Min. Radius

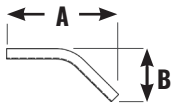

Includes 1/4" dia. bolting

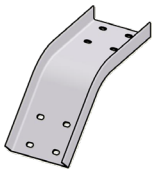

Metal	Width	Part No.	Cover Part No.
Hot-Dip Galv. Steel*	1	OCV1-GC1-R3D45	-
	2	OCV2-GC1-R3D45	CV-O2MG1 R3D45
	4	OCV4-GC1-R3D45	CV-O4MG1 R3D45
	6	OCV6-GC1-R3D45	CV-O6MG1 R3D45
Natural Finish Alum.	1	OCV1-NA1-R3D45	-
	2	OCV2-NA1-R3D45	CV-O2NA1 R3D45
	4	OCV4-NA1-R3D45	CV-O4NA1 R3D45
	6	OCV6-NA1-R3D45	CV-O6NA1 R3D45
Stainless Steel T-304	1	OCV1-SS1 R3D45T4	-
	2	OCV2-SS1 R3D45T4	CV-O2SS1 R3D45T4
	4	OCV4-SS1 R3D45T4	CV-O4SS1 R3D45T4
	6	OCV6-SS1 R3D45T4	CV-O6SS1 R3D45T4
Stainless Steel T-316	1	OCV1-SS1 R3D45T6	-
	2	OCV2-SS1 R3D45T6	CV-O2SS1 R3D45T6
	4	OCV4-SS1 R3D45T6	CV-O4SS1 R3D45T6
	6	OCV6-SS1 R3D45T6	CV-O6SS1 R3D45T6

A: 11.75" **B: 4.5"**
Nominal Engagement: 3.5"

©2021 James C. White Co., Inc. CT2109

Classifications of channels, splices, bends, pg. 49

*Fittings are HDGF; Covers are mill-galvanized

Outside Channel Vertical Adjustable Bend (0-90°)

Patent No.: US 8,167,250 B2

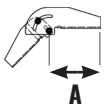

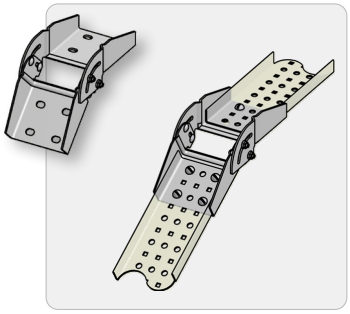

Metal	Width	Part No.	Cover Part No.
Hot-Dip	2	OCV2-GC2-DA	-
Galv.	4	OCV4-GC2-DA	-
Steel	6	OCV6-GC2-DA	-
Natural	2	OCV2-NA2-DA	-
Finish	4	OCV4-NA2-DA	-
Alum.	6	OCV6-NA2-DA	-
Stainless	2	OCV2-SS2-DAT4	-
Steel	4	OCV4-SS2-DAT4	-
T-304	6	OCV6-SS2-DAT4	-
Stainless	2	OCV2-SS2-DAT6	-
Steel	4	OCV4-SS2-DAT6	-
T-316	6	OCV6-SS2-DAT6	-

A: 5.25”
Nominal Engagement: 3.5”

Includes 3/8” dia. bolting (same part as 2” deep, page 21). Cut channels so that round holes are on the connecting end.

Offset Channel Vertical Adjustable Bend (0-90°)

Patent No.: US 8,167,250 B2

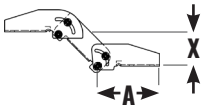

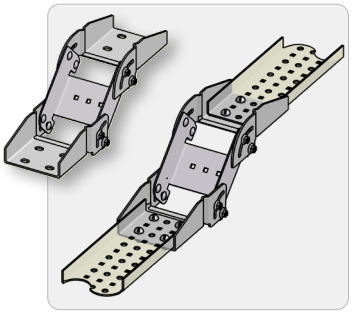

Metal	Width	Part No.	Cover Part No.
Hot-Dip	2	OCV2-GC2-DDA5	-
Galv.	4	OCV4-GC2-DDA5	-
Steel	6	OCV6-GC2-DDA5	-
Natural	2	OCV2-NA2-DDA5	-
Finish	4	OCV4-NA2-DDA5	-
Alum.	6	OCV6-NA2-DDA5	-
Stainless	2	OCV2-SS2-DDA5T4	-
Steel	4	OCV4-SS2-DDA5T4	-
T-304	6	OCV6-SS2-DDA5T4	-
Stainless	2	OCV2-SS2-DDA5T6	-
Steel	4	OCV4-SS2-DDA5T6	-
T-316	6	OCV6-SS2-DDA5T6	-

A: 6”
Nominal Engagement: 3.5”
X: Offset at 45° (shown) 3.25”
Max. offset (bends at 90°) 5”

Includes 3/8” dia. bolting (same part as 2” deep, page 22). Cut channels so that round holes are on the connecting end.

©2021 James C. White Co., Inc. CT2109

Channel End Cover

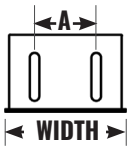

Includes 1/4" dia. bolting

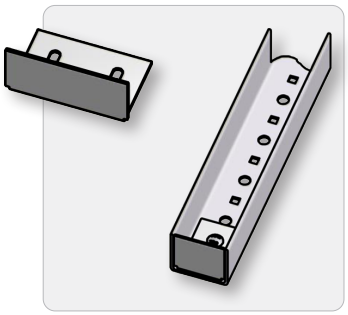

Metal	Width	A	Part No.
Stainless Steel T-304	2	0	CVE-CH2SS1T4
	4	2	CVE-CH4SS1T4
	6	4	CVE-CH6SS1T4
Stainless Steel T-316	2	0	-
	4	2	-
	6	4	-

Channel End Covers are used where there is a requirement to enclose the end of a TUBETRACK® tray. TUBETRACK® End Covers are adjustable to make flush with the end of the tray.

Reduction Guide

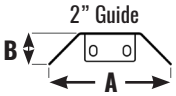

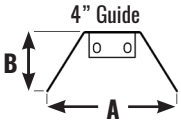

Includes 3/8" dia. bolting

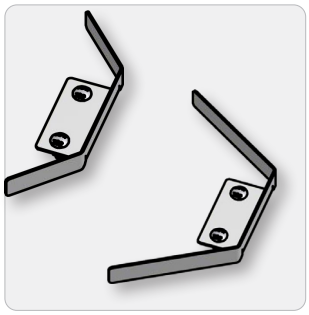

Metal	Width	A	B	Part No.
Stainless Steel T-304	2	7.3"	2"	REG2SS1-T4RHLH
	4	8.5"	4"	REG4SS1-T4RHLH
Stainless Steel T-316	2	7.3"	2"	-
	4	8.5"	4"	-

Use with standard TUBETRACK® splice fittings. Reduction Guides are adjustable to a desired flange alignment. Each deflector can be used for either right hand or left hand reduction. Fasteners included with each Reduction Guide.

Channel & Fitting Cover Clamps

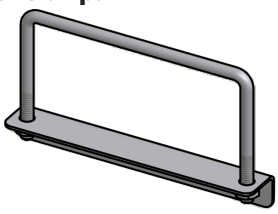

Sold Separately from Cover

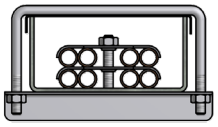

- Clamp: CCC2-SS4-1
- Channel: 2" x 1"

Channel Width	Channel Depth	Part No. Cover Clamp for Channel	Part No. Cover Clamp for Fittings
1	1	CCC1-SS4-1	-
2		CCC2-SS4-1	FCC2-SS4-1
4		CCC4-SS4-1	FCC4-SS4-1
6		CCC6-SS4-1	FCC6-SS4-1

Four piece set includes base, U-bolt, and two hex flange nuts, all in 300 series stainless steel. Straight length covers (10 ft. and 12 ft. long) usually require three Channel Cover Clamps ("CCC"), and fitting covers usually require one Fitting Cover Clamp ("FCC") per end. Bases are marked with "C" or "F" to indicate Channel or Fitting.
Also available in 316 Stainless Steel - contact Factory.

Examples of Reduction Options:

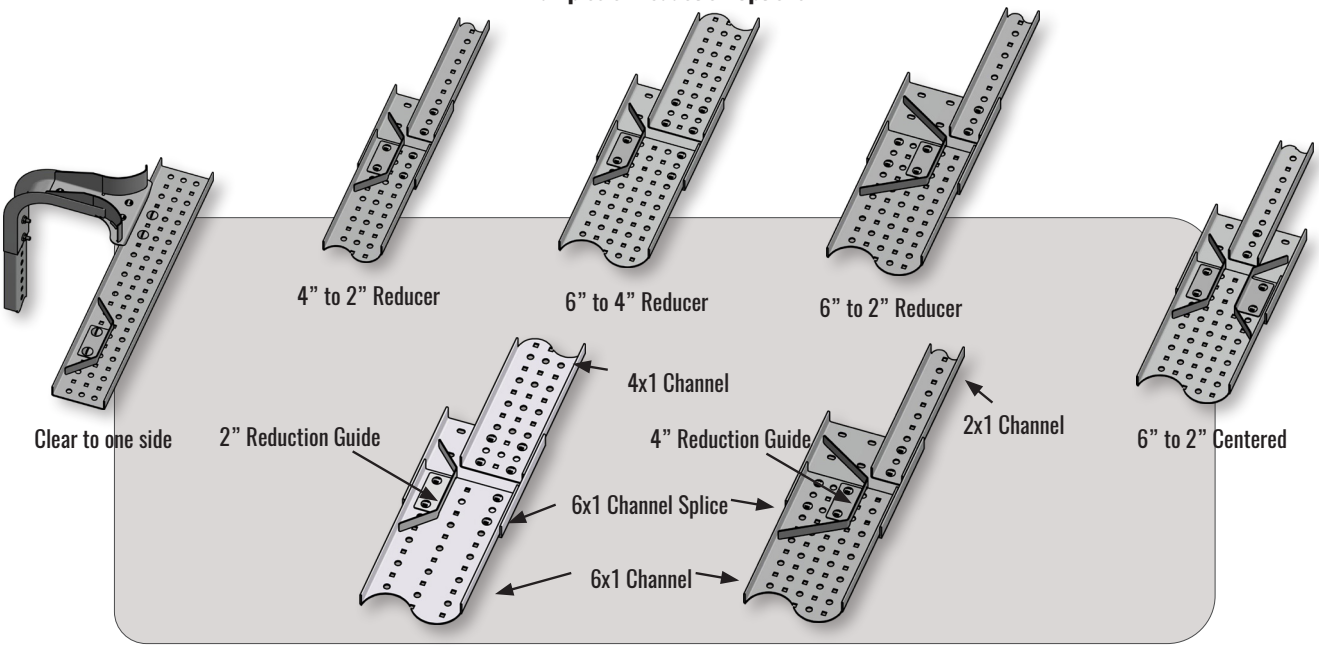

Classifications of channels, splices, bends, pg. 49

*Fittings are HDGF; Covers are mill-galvanized

©2021 James C. White Co., Inc. CT2109

Clamps & Hardware

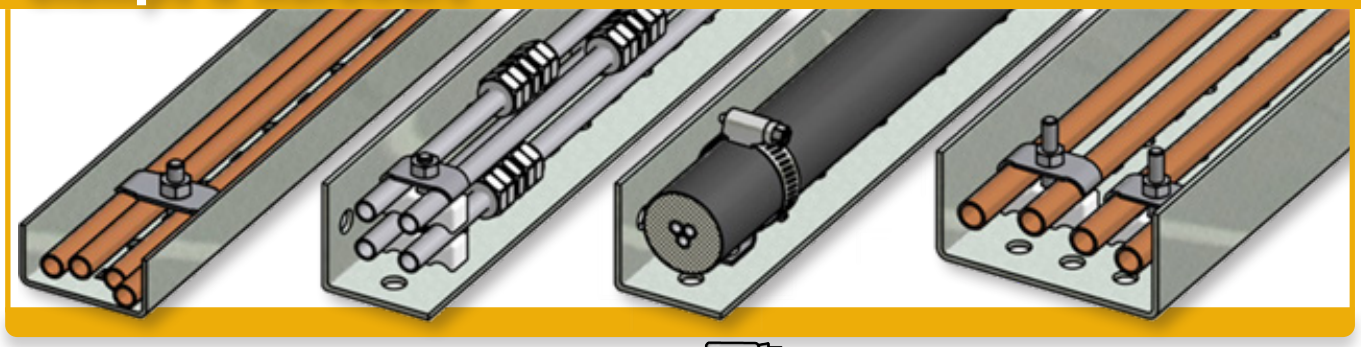

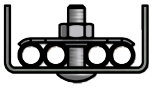

- Clamp: YC4-SS4-375-1
- Tubing Bolt: 1” long
- Tubes: 3/8” dia.
- Channel: 2” x 1”

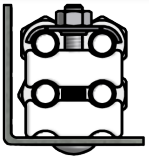

- Spacer: SPC2-PL-375
- Top clamp: YC2-SS4-438
- Tubing Bolt: 2” long
- Tubes: 3/8” dia.
- Angle: 2” x 2”

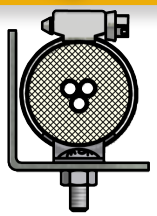

- Clamp: BLC1-SS4-1.50
- Bolt: included
- Bundle: 1-1/2” dia.
- Angle: 2” x 2”

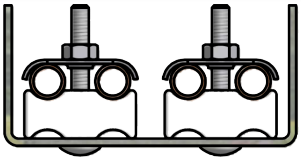

- Spacer: SPC2-PL-500
- Top clamp: YC2-SS4-500
- Tubing Bolt: 2” long
- Tubes: 1/2” dia.
- Channel: 4” x 2”

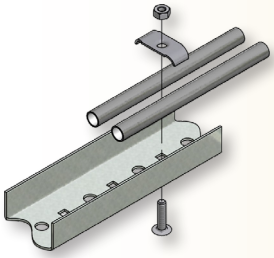

Fastening Clamps

Tubing is fastened into TUBETRACK® using a JCWCO Yoke Clamp and 1/4”-20 Tubing Bolts. Tubing Bolts have special short carriage square to fit the hole and assist in speed of assembly. Fasteners are included only with flat clamps and Bundle Lock clamps.

EXAMPLES

- Clamp: YC2-SS4-250
- Tubing Bolt: 0.75” long
- Tubes: 1/4” dia.
- Channel: 1” x 1”

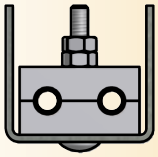

- Clamp: NC-2-250-2D
- Tubing Bolt: 2” long
- Tubes: 1/4” dia.
- Channel: 2” x 2”

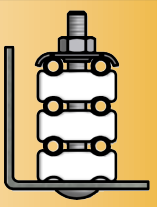

- Spacer: SPC2-PL-250
- Top clamp: YC2-SS4-313
- Tubing Bolt: 2.5” long
- Tubes: 1/4” dia.
- Angle: 2” x 2”

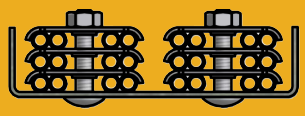

- Clamp: YC4-SS4-250-313
- Tubing Bolt: 1.25” long
- Tubes: 1/4” dia.
- Channel: 4” x 1”

EXAMPLES

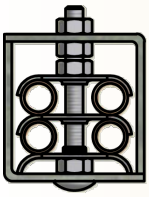

- Clamp: YC2-SS4-500
- Tubing Bolt: 2.50” long
- Tubes: 1/2” dia.
- Angle: 2” x 2”
- Angle: 2” x 2” as cover

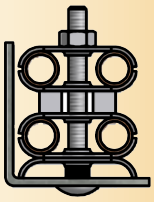

- Spacer: SPC2-SS4-500
- Top & bottom clamp: YC2-SS4-500
- Tubing Bolt: 2.5” long
- Tubes: 1/2” dia.
- Angle: 2” x 2”

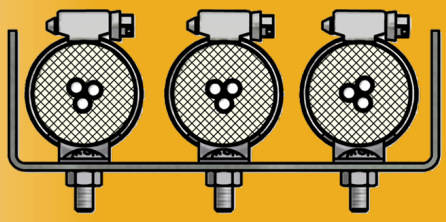

- Clamp: BLC1-SS4-1.50
- Bolt: included
- Bundle: 1-1/2” dia.
- Channel: 6” x 2”

©2021 James C. White Co., Inc. CT2109

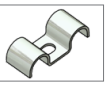

Clamps

EXAMPLES

Yoke Clamp 2 Tubes

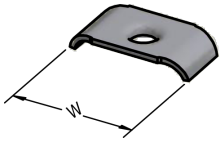

Fasteners not included

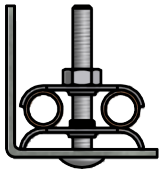

- Clamp: YC2-SS4-500
- Tubing Bolt: 2" long
- Tubes: 1/2" OD
- Angle: 2" x 2"

No. of Tubes	Min Tube	Max OD of Tube	Part No. 304 Stainless Steel	Part No. 316 Stainless Steel	Dim. W
2	.125	.250	YC2-SS4-250	YC2-SS6-250	.938
	.250	.3125	YC2-SS4-313	YC2-SS6-313	1.145
	.3125	.375	YC2-SS4-375	YC2-SS6-375	1.225
	.375	.500	YC2-SS4-438	YC2-SS6-438	1.375
	.500	.6250	YC2-SS4-500	YC2-SS6-500	1.641
	.750	.8125	YC2-SS4-750	YC2-SS6-750	2.000
	1.000	1.062	YC2-SS4-1000	-	2.500

Note: You can use yoke clamps for spacing as well as for holding tubes in place. See example, cross section illustration, left.
Bagged at 25 per bag or shipped in bulk. Order in multiples of 25.
1/4" dia. Fasteners are not included - order fasteners separately.

SR

Yoke Clamp 4 Tubes

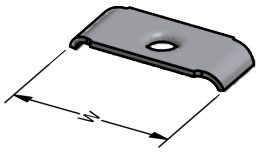

Fasteners not included

- Clamp: YC4-SS4-250-313
- Tubing Bolt: 1.25" long
- Tubes: 1/4" OD
- Channel: 2" x 1"

No. of Tubes	Min OD of Tube	Max OD of Tube	Part No. 304 Stainless Steel	Part No. 316 Stainless Steel	Dim. W
4	0.250	0.3125	YC4-SS4-250-313	YC4-SS6-250-313	1.711
	0.3125	0.375	YC4-SS4-375-1	-	1.750
	0.375	0.4375	YC4-SS4-375	-	2.250
	0.500	0.5625	YC4-SS4-500	-	2.750

Note: Yoke clamps can be used for stacking layers of tubes. See example, cross section illustration, left. Bagged at 25 per bag or shipped in bulk. Order in multiples of 25.
1/4" dia. Fasteners are not included - order fasteners separately.

SR

Single Clamp 1 Tube

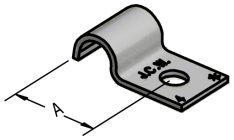

Fasteners not included

For Universal Applications

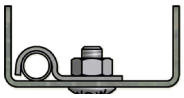

- Clamp: YC1-SS4-375
- Tubing Bolt: 1/4" dia
- Tube: 3/8" dia.
- Channel: 2" x 1"

No. of Tubes	Nominal Tube OD	Part No. 304 Stainless Steel	Part No. 316 Stainless Steel	Dim. A	Bag Qty.
1	0.250	YC1-SS4-250	YC1-SS6-250	0.79	25
	0.375	YC1-SS4-375	YC1-SS6-375	0.95	
	0.500	YC1-SS4-500	YC1-SS6-500	1.08	
	0.750	YC1-SS4-750	YC1-SS6-750	1.33	
	1.000	YC1-SS4-1000	YC1-SS6-1000	1.61	
	1.500	YC1-SS4-1500	YC1-SS6-1500	2.25	
	2.000	YC1-SS4-2000	YC1-SS6-2000	2.75	

1/4", 3/8" YC1 clamps fit in 2" wide TUBETRACK® tray.
Bagged at 25 or shipped in bulk. Order in multiples of 25.
1/4" dia. Fasteners are not included - order fasteners separately.

SR

Duplex Clamp 2 Tubes

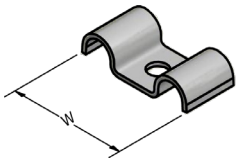

Fasteners not included

For Universal Applications

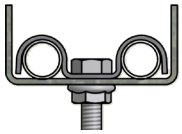

- Clamp: DPC2-SS4-500
- Hex Bolt: 1/4" dia. x 3/4"
- Tubes: 1/2" dia.
- Channel: 2" x 1"

No. of Tubes	Nominal Tube OD	Part No. 304 Stainless Steel	Part No. 316 Stainless Steel	Dim. W	Bag Qty.
2	0.250	DPC2-SS4-250	DPC2-SS6-250	1.54	25
	0.375	DPC2-SS4-375	DPC2-SS6-375	1.60	
	0.500	DPC2-SS4-500	DPC2-SS6-500	1.86	
	0.750	-	DPC2-SS6-750	2.52	10
	1.000	-	DPC2-SS6-1000	3.03	

1/4", 3/8", and 1/2" DPC2 clamps fit in 2" wide TUBETRACK® tray.
1/2", 3/4", and 1" DPC2 clamps fit in 3" wide TUBETRACK® angle tray.
Bagged at 25 per bag or shipped in bulk. Order in multiples of 25.
1/4" dia. Fasteners are not included - order fasteners separately.

SR

SR Safety-Related options, pg. 2

©2021 James C. White Co., Inc. CT2109

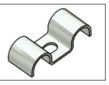

EXAMPLES

Spacer Clamp Stainless Steel Welded

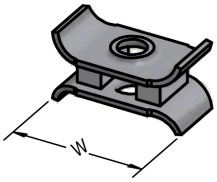

Fasteners not included

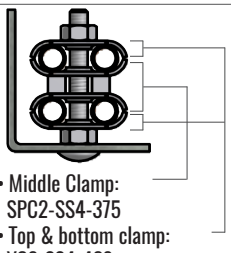

- Middle Clamp: SPC2-SS4-375
- Top & bottom clamp: YC2-SS4-438
- Tubing Bolt: 2" long
- Tubes: 3/8" OD
- Angle: 2" x 2"

No. of Tubes	Nominal Tube OD	Part No. 304 Stainless Steel	Dim. W	Matching Yoke Clamp	Bag Qty.
2	0.250	SPC2-SS4-250	1.145	YC2-SS4-313	25
	0.375	SPC2-SS4-375	1.375	YC2-SS4-438	
	0.500	SPC2-SS4-500	1.640	YC2-SS4-500	

No. of Tubes	Nominal Tube OD	Part No. 316 Stainless Steel	Dim. W	Matching Yoke Clamp	Bag Qty.
2	0.250	SPC2-SS6-250	1.145	YC2-SS6-313	25
	0.375	SPC2-SS6-375	1.375	YC2-SS6-438	
	0.500	SPC2-SS6-500	1.640	YC2-SS6-500	

Bagged at 25 per bag. Order in multiples of 25.
Fasteners are not included - order fasteners separately.

Multi-Line Clamp

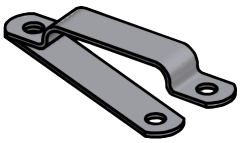

Fasteners not included

Note: Multi-Line, "gang clamps" are available in 16 gage stainless steel material. They are not designed to fit in TUBETRACK® channels. Bolts (round-head or hex) and nuts, 316 stainless, sold separately.

316 Stainless Steel Clamps - For Universal Applications

No. of Tubes	Part No. 0.250" Tube OD	Part No. 0.375" Tube OD	Part No. 0.500" Tube OD	Part No. 0.750" Tube OD
2	MLC2-SS6-250	MLC2-SS6-375	MLC2-SS6-500	MLC2-SS6-750
3	MLC3-SS6-250	MLC3-SS6-375	MLC3-SS6-500	MLC3-SS6-750
4	MLC4-SS6-250	MLC4-SS6-375	MLC4-SS6-500	MLC4-SS6-750
5	MLC5-SS6-250	MLC5-SS6-375	MLC5-SS6-500	-
6	MLC6-SS6-250	MLC6-SS6-375	MLC6-SS6-500	-
7	MLC7-SS6-250	MLC7-SS6-375	MLC7-SS6-500	-
8	MLC8-SS6-250	MLC8-SS6-375	MLC8-SS6-500	-
9	MLC9-SS6-250	MLC9-SS6-375	MLC9-SS6-500	-
10	MLC10-SS6-250	MLC10-SS6-375	MLC10-SS6-500	-
11	MLC11-SS6-250	MLC11-SS6-375	MLC11-SS6-500	-
12	MLC12-SS6-250	MLC12-SS6-375	MLC12-SS6-500	-

304 Stainless Steel Clamps - For 1/8" Dia. Capillary Tubes

No. of Tubes	Part No. 0.125" Tube OD
2	MLC2-SS4-125
8	MLC8-SS4-125

Fasteners are not included - order fasteners separately.
Bagged at 25 per bag or shipped in bulk. Order in multiples of 25.

Plastic Spacer Clamp Holds 2 Tubes

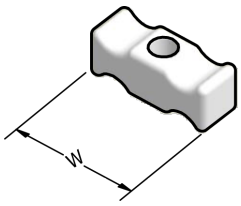

Fasteners not included

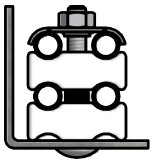

- Spacer: SPC2-PL-375
- Top clamp: YC2-SS4-438
- Tubing Bolt: 2" long
- Tubes: 3/8" OD
- Angle: 2" x 2"

No. of Tubes	Nominal Tube OD	Part No. Plastic Clamp	Dim. W	Matching Yoke Clamp	Bag Qty.
2	0.250	SPC2-PL-250	1.094	YC2-SS4-313	25
	0.375	SPC2-PL-375	1.375	YC2-SS4-438	
	0.500	SPC2-PL-500	1.594	YC2-SS4-500	

Spacer Clamps hold two tubes on each layer and allow room for compression tube fittings in straight runs of tubing. Plastic Spacer Clamps are not recommended above 150°F.

Bagged at 25 per bag or shipped in bulk. Order in multiples of 25.
Fasteners are not included - order fasteners separately.

Stainless Steel Cap for Plastic Spacer Clamps

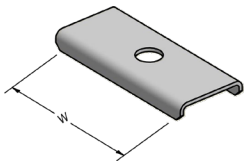

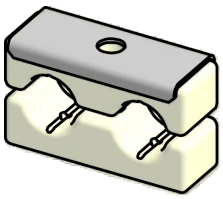

- Example of Cap in use

Part No. SS304 Cap	Part No. SS316 Cap	Dim. W	Matching Spacer Clamp	Bag Qty.
CAP-SPC2PL-S4-2	CAP-SPC2PL-S6-2	1.094	SPC2-PL-250	25
CAP-SPC2PL-S4-3	CAP-SPC2PL-S6-3	1.375	SPC2-PL-375	
CAP-SPC2PL-S4-5	CAP-SPC2PL-S6-5	1.5625	SPC2-PL-500	

Bagged at 25 per bag or shipped in bulk. Order in multiples of 25.
Spacer Clamps and Fasteners are not included - order separately.

©2021 James C. White Co., Inc. CT2109

Pipe Clamp Assembly Small Pipe & Large Tubing

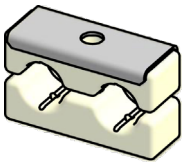

Includes Stainless Steel Cap

EXAMPLES

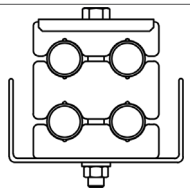

- (1) Clamp Assembly
- (1) Intermediate Spacer
- 3/8" Dia. Bolt
- (4) tubes: .675" dia.
- TUBETRACK® Tray: 4" x 2"

No. of Pipes	Pipe Size	Nominal Tube/Pipe OD	Part No. Assembly	Bag Qty.
2	1/4"	-	-	
	3/8"	.675	PC2-PL1-375A	
	1/2"	-	-	

Clamp manufactured from Black nylon with UV, fuel, and oil resistance (shown in white for better visibility). Secured using 3/8" bolting (see pg. 44 for bolting options). Each Pipe Clamp Assembly includes top and bottom clamps with one stainless steel cap. Add one Pipe Clamp Spacer (below) for each additional pipe pair desired per assembly.
Fasteners are not included - order fasteners separately.

Pipe Clamp Spacer Small Pipe & Large Tubing

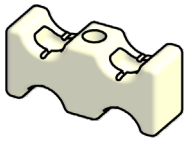

No. of Pipes	Pipe Size	Nominal Tube/Pipe OD	Part No. Spacer	Bag Qty.
2	1/4"	-	-	
	3/8"	.675	PCS2-PL1-375A	
	1/2"	-	-	

Spacer manufactured from Black nylon with UV, fuel, and oil resistance (shown in white for better visibility). Secured using 3/8" bolting (see pg. 44 for bolting options).

Examples of possible configurations using Pipe Clamp and Spacer:

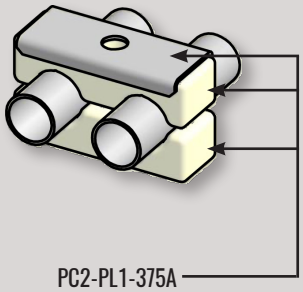

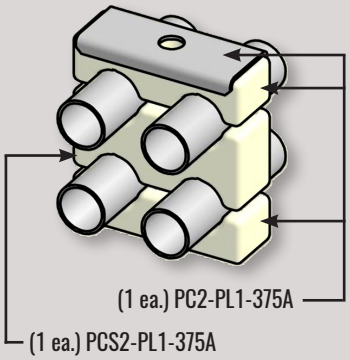

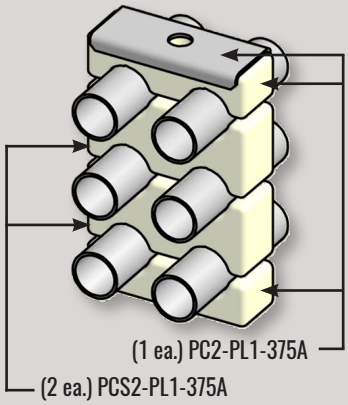

A: 1.560" D: 2.75"
B: 1.375" E: 1.50"
C: 0.75"

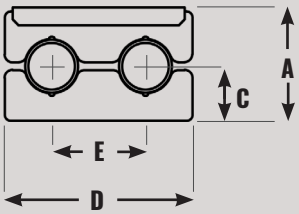

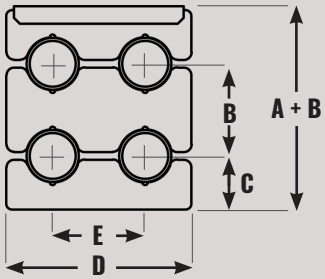

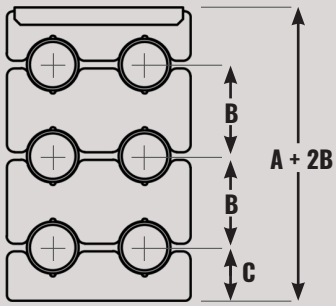

©2021 James C. White Co., Inc. CT2109

EXAMPLES

Bundle Lock Clamp

Includes Fasteners

- Clamp: BLC1-SS4-150
- Bolt: Included
- Bundle: 1-1/2" dia.
- Channel: 2" x 2"

No. of Bundles	Min. OD of Bundle	Max OD of Bundle	Part No. 304 Stainless Steel	Bag Qty.
1	0.625	0.750	BLC1-SS4-0.75	10
	0.750	0.875	BLC1-SS4-0.87	
	0.875	1.000	BLC1-SS4-1.00	
	1.000	1.250	BLC1-SS4-1.25	
	1.250	1.500	BLC1-SS4-1.50	
	1.375	1.750	BLC1-SS4-1.75	
	1.750	2.000	BLC1-SS4-2.00	
	2.000	2.250	BLC1-SS4-2.25	
	2.250	2.750	BLC1-SS4-2.75	
	2.750	3.500	BLC1-SS4-3.50	

Four piece set includes clamp, saddle, bolt, and nut.
Bagged 10 sets per bag. Order in multiples of 10.

CAUTION: Consider linear thermal expansion.

Bundle Guide

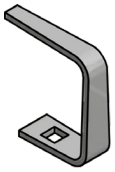

Includes Fasteners

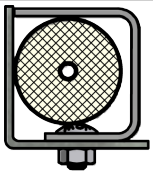

- Clamp: BG1-SS4-150
- Bundle: 1-1/2" OD
- Bolt: Included
- Angle: 2" x 2"

Max OD of Bundle	Part Number 18-8 Stainless Steel
1.500	BG1-SS4-1.50

Three piece set includes guide, bolt, and nut, all in 300 series stainless steel. The 1.50 size fits standard TUBETRACK® angle (left), provides loose fit for smaller bundles, and allows for thermal expansion of small bundles. Other sizes are available. Contact factory with your specific requirements.

Bundle Lock Clamp Large, Anchor

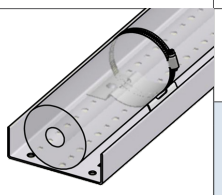

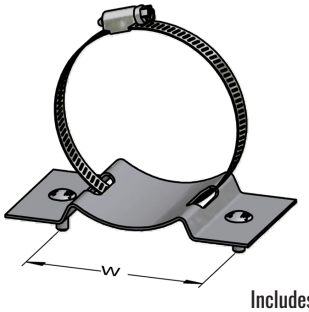

Includes Fasteners

No. of Bundles	Min. OD Bundle	Max OD Bundle	Part No. 304 Stainless Steel 3-Directional	Dim. W
1	1.5"	2.4"	BLC1W-SS4-200	4"
	2.3"	3.1"	BLC1W-SS4-250	4"
	2.8"	3.4"	BLC1W-SS4-300	4"
	3.3"	4.1"	BLC1W-SS4-350	4"
	3.8"	4.6"	BLC1W-SS4-400	4"

Anchor clamp holds larger bundles in horizontal or vertical runs of 6" x 2" TUBETRACK® channel tray. This 3-directional clamp locks bundle in place along tray.
Fasteners included for TUBETRACK® 6" x 2" tray.
Anchor clamp - CAUTION: Consider linear thermal expansion.

Bundle Guide Clamp Large, Expansion

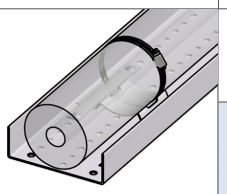

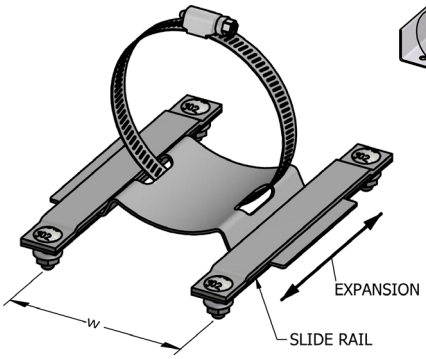

Includes Fasteners

No. of Bundles	Min. OD Bundle	Max OD Bundle	Part No. 304 Stainless Steel 2-Directional	Dim. W	Expansion Range
1	1.5"	2.4"	BLC1W-S4-200-E2	4"	2"
	2.3"	3.1"	BLC1W-S4-250-E2	4"	2"
	2.8"	3.4"	BLC1W-S4-300-E2	4"	2"
	3.3"	4.1"	BLC1W-S4-350-E2	4"	2"
	3.8"	4.6"	BLC1W-S4-400-E2	4"	2"
	1.5"	2.4"	BLC1W-S4-200-E4	4"	4"
	2.3"	3.1"	BLC1W-S4-250-E4	4"	4"
	2.8"	3.4"	BLC1W-S4-300-E4	4"	4"
	3.3"	4.1"	BLC1W-S4-350-E4	4"	4"
	3.8"	4.6"	BLC1W-S4-400-E4	4"	4"

Expansion clamp holds larger bundles in horizontal or vertical runs of 6" x 2" TUBETRACK® channel tray. This 2-directional clamp holds bundle in place along tray but allows for linear thermal expansion.

Fasteners included for TUBETRACK® 6" x 2" tray.

©2021 James C. White Co., Inc. CT2109

NC & PC Series Tube and Pipe Clamps

- Machined from solid stainless steel
- Heavy duty clamps used in both commercial and safety-related applications
- Available as 2-directional (guide clamp) or 3-directional (anchor clamp)
- Part numbers listed in this catalog are the most commonly used sizes/types. Contact Factory for additional clamp sizes/types and for technical data including Load Rating Data Sheets

Illustration of 2-Directional and 3-Directional holds:

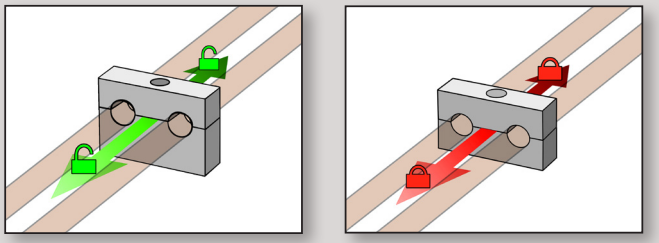

2-Directional (2D) guide clamps allow axial movement of tubing.

3-Directional (3D) anchor clamps do not allow movement of tubing

NC-Series Clamp 2 Tubes

1/8" - 1/2"
TUBE O.D.

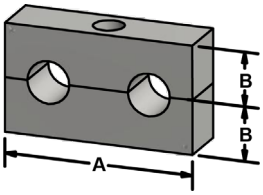

No. of Tubes	Nominal Tube OD	Part No. 2D Guide Clamp	Part No. 3D Anchor Clamp	Dimensions A	Dimensions B
2	0.125	NC-2-125-2D	NC-2-125-3D	1.75	0.50
	0.1875	NC-2-188-2D	NC-2-188-3D		
	0.250	NC-2-250-2D	NC-2-250-3D		
	0.375	NC-2-375-2D	NC-2-375-3D		
	0.500	NC-2-500-2D	NC-2-500-3D		

1/4" Bolting. Hardware not included.

Corresponding Weld-Down Base part number: WBS4-A5050
(See pg. 43 for more information) SR

NC-Series Clamp 2 Tubes, Tall Base

1/8" - 1/2"
TUBE O.D.

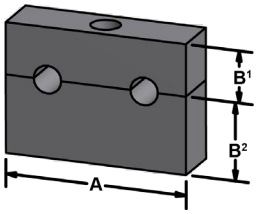

No. of Tubes	Nominal Tube OD	Part No. 2D Guide Clamp	Part No. 3D Anchor Clamp	Dimensions A	Dimensions B
2	0.125	NC-2-125-2DBS	NC-2-125-3DB	1.75	B^1: 0.50 B^2: 0.75
	0.1875	NC-2-188-2DBS	NC-2-188-3DB		
	0.250	NC-2-250-2DBS	NC-2-250-3DB		
	0.375	NC-2-375-2DBS	NC-2-375-3DB		
	0.500	NC-2-500-2DBS	NC-2-500-3DB		

Taller 3/4" base allows for more clearance between tube fittings and tray.
1/4" Bolting. Hardware not included.
Corresponding Weld-Down Base part number: WBS4-A5050
(See pg. 43 for more information) SR

NC-Series Clamp 2 Tubes, Chamfered

1/4" - 1/2"
TUBE O.D.

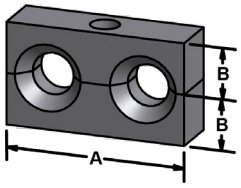

No. of Tubes	Nominal Tube OD	Part No. 2D Guide Clamp	Dimensions A	Dimensions B
2	0.250	NC-2-250-2DL	1.75	0.50
	0.375	NC-2-375-2DL		
	0.500	NC-2-500-2DL		

Larger-diameter chamfered tube holes permit some angular displacement of tubes.
1/4" Bolting. Hardware not included.
Corresponding Weld-Down Base part number: WBS4-A5050
(See pg. 43 for more information) SR

NC-Series Clamp 1 Tube

1/8" - 1/2"
TUBE O.D.

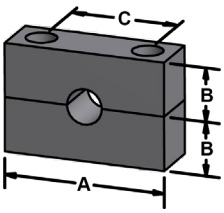

No. of Tubes	Nominal Tube OD	Part No. 2D Guide Clamp	Part No. 3D Anchor Clamp	Dimensions A	Dimensions B	Dimensions C
1	0.125	NC-1-125-2D	-	1.50	0.50	1.00
	0.1875	NC-1-188-2D	NC-1-188-3D			
	0.250	NC-1-250-2D	NC-1-250-3D			
	0.375	NC-1-375-2D	NC-1-375-3D			
	0.500	NC-1-500-2D	NC-1-500-3D			

1/4" Bolting. Hardware not included.
Corresponding Weld-Down Base part number: WBS4-A5051
(See pg. 43 for more information) SR

SR Safety-Related options, pg. 2

©2021 James C. White Co., Inc. CT2109

NC-Series Tube Clamp
1 Tube, Tall Base

3/16" - 1/2"
TUBE O.D.

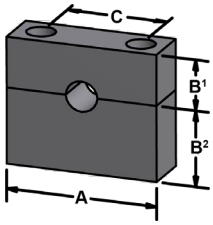

No. of Tubes	Nominal Tube OD	Part No. 2D Guide Clamp	Part No. 3D Anchor Clamp	Dimensions		
				A	B	C
1	0.1875	NC-1-188-2DBS	NC-1-188-3DB	1.50	B¹: 0.50 B²: 0.75	1.00
	0.250	NC-1-250-2DBS	NC-1-250-3DB			
	0.375	NC-1-375-2DBS	NC-1-375-3DB			
	0.500	NC-1-500-2DBS	NC-1-500-3DB			

Taller 3/4" base allows for more clearance between tube fittings and tray.
1/4" Bolting. Hardware not included.

Corresponding Weld-Down Base part number: WBS4-A5051
(See pg. 43 for more information) SR

PC-Series Pipe Clamp
1 Pipe

1/4" - 2"
PIPE O.D.

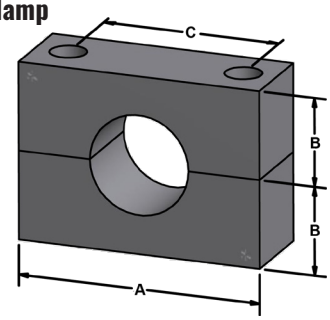

No. of Pipes	Pipe Size	Part No. 2D Guide Clamp	Part No. 3D Anchor Clamp	Dimensions		
				A	B	C
1	0.250	PC-1-250-2D	PC-1-250-3D	2.75	1.00	2.00
	0.375	PC-1-375-2D	PC-1-375-3D			
	0.500	PC-1-500-2D	PC-1-500-3D			
	0.750	PC-1-750-2D	PC-1-750-3D			
	1.000	PC-1-1000-2D	PC-1-1000-3D			
	1.500	PC-1-1500-2D	PC-1-1500-3D	5.50	2.00	3.50
	2.000	PC-1-2000-2D	PC-1-2000-3D			

Taller 3/4" base allows for more clearance between tube fittings and tray.
3/8" Bolting. Hardware not included.
Corresponding Weld-Down Base part number: Contact Factory
SR

Tube and Pipe Clamps - Machined to Your Specification

Part numbers listed in this catalog are only the most commonly used sizes and types.
We routinely partner with our customers to fabricate and machine custom parts.
Contact Factory for additional clamp sizes and types needed for your application.

©2021 James C. White Co., Inc. CT2109

SR Safety-Related options, pg. 2

Weld-Down Pipe Clamp
1 Pipe

1/4" - 1"
PIPE O.D.

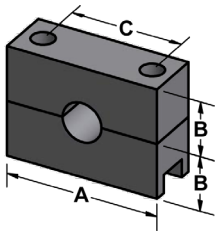

No. of Pipes	Nominal Pipe OD	Part No. 2D Guide Clamp	Part No. 3D Anchor Clamp	Dimensions		
				A	B	C
1	0.250	PC-1-250-2DWD	PC-1-250-3DWD	2.75	1.00	1.375
	0.375	PC-1-375-2DWD	PC-1-375-3DWD			
	0.500	PC-1-500-2DWD	PC-1-500-3DWD			
	0.750	PC-1-750-2DWD	PC-1-750-3DWD			
	1.000	PC-1-1000-2DWD	PC-1-1000-3DWD			

3/8" bolting. Hardware included.

SR

NEW Weld-Down Bases for NC-Series Clamps

When an application requires weld mounting of Tube or Pipe Clamps to a structure, the **Weld-Down Base** is first welded to the structure. The clamp and bolting are then installed on the **Weld-Down Base**. This enables precision alignment of the clamps and prevents the clamps and bolting from being damaged or distorted by welding. The **Weld-Down Base** enables easy replacement of the clamp and bolting after installation.

Contact Factory for additional sizes and types of Weld-Down Bases

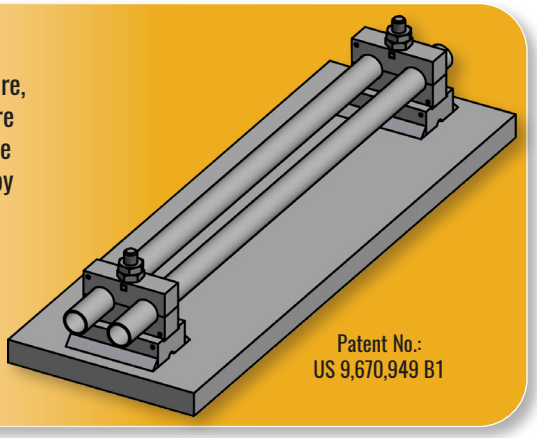

Patent No.:
US 9,670,949 B1

Weld-Down Clamp Base for 2-Tube Clamps

Patent No.: US 9,670,949 B1

Shown:
NC-2 clamp on a Weld-Down Base

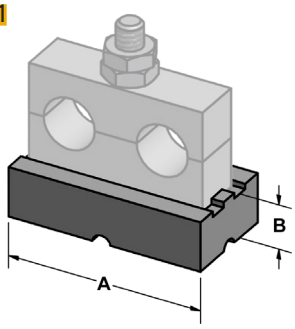

Part No.	Dimensions	
	A	B
WBS4-A5050	1.94	0.45

Bolting hardware and Tube Clamp not included with Weld-Down Base.
See individual clamp listing for correct corresponding Weld-Down Base.

Made to order or to fit JCWCO NC-Series Clamps. May not be available from stock.

SR

Weld-Down Clamp Base for 1-Tube Clamps

Patent No.:
US 9,670,949 B1

Shown:
NC-1 clamp on a Weld-Down Base

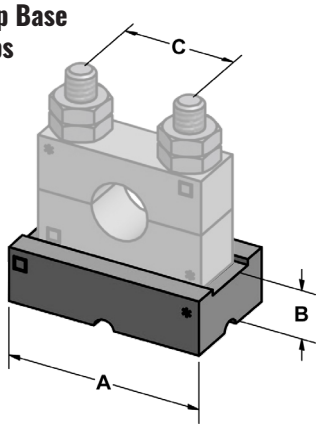

Part No.	Dimensions		
	A	B	C
WBS4-A5051	1.75	0.45	1.00

Bolting hardware and Tube Clamp not included with Weld-Down Base.
See individual clamp listing for correct corresponding Weld-Down Base.

Made to order or to fit JCWCO NC-Series Clamps. May not be available from stock.

SR

SR Safety-Related options, pg. 2

©2021 James C. White Co., Inc. CT2109

EXAMPLES

JCWCO Tubing Bolt 1/4" Dia., 20 Thread

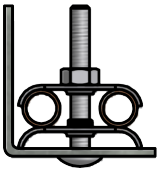

Tubing Bolt 2" long

Nuts sold separately

Bolt Length	Part No. 18-8 Stainless Steel	Part No. 316 Stainless Steel	Bag Qty.
0.50	TBSS4-250X0.50	TBSS6-250X0.50	25
0.75	TBSS4-250X0.75	TBSS6-250X0.75	
1.00	TBSS4-250X1.00	TBSS6-250X1.00	
1.25	TBSS4-250X1.25	TBSS6-250X1.25	
1.50	TBSS4-250X1.50	TBSS6-250X1.50	
2.00	TBSS4-250X2.00	TBSS6-250X2.00	
3.00	TBSS4-250X3.00	TBSS6-250X3.00	
3.50	TBSS4-250X3.50	TBSS6-250X3.50	
4.00	TBSS4-250X4.00	TBSS6-250X4.00	

Special short square carriage fits in square holes in punch pattern.
Bagged 25 per bag, or shipped in bulk. Order in multiples of 25.
Low profile JCWCO Tubing Bolts are provided with all standard 1" deep TUBETRACK® tray fittings and Flat Clamps.

Hex Head Bolts 1/4"-20 NC, 3/8"-16

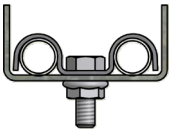

1-4"-20 Hex Head Bolt, 3/4" Long with Flange Lock Nut

Nuts sold separately

1/4" Diameter

Bolt Length	Part No. Zinc Plated Steel	Part No. 18-8 Stainless Steel	Part No. 316 Stainless Steel	Bag Qty.
0.75	-	MBSS4-250X0.75	-	25
1.00	-	MBSS4-250X1.00	-	
1.25	-	MBSS4-250X1.25	-	
1.50	-	MBSS4-250X1.50	-	

3/8" Diameter

1.50	-	MBSS4-375X1.50	-	25
2.00	-	MBSS4-375X2.00	-	
2.50	-	MBSS4-375X2.50	-	
3.00	-	MBSS4-375X3.00	-	
3.50	-	MBSS4-375X3.50	-	
4.00	-	MBSS4-375X4.00	-	
5.00	-	MBSS4-375X5.00	-	

Bagged 25 per bag, or shipped in bulk. Order in multiples of 25.

Other lengths of Hex Head Bolts may be available upon request.

Truss-Head Bolts 3/8" Dia., 16 Thread Slotted

Bolt Length	Part No. Zinc Plated Steel	Part No. 18-8 Stainless Steel	Part No. 316 Stainless	Bag Qty.
0.75	THBZN-375X0.75	THBSS4-375X0.75	THBSS6-375X0.75	25
1.00	THBZN-375X1.00	-	THBSS6-375X1.00	

Bagged 25 per bag, or shipped in bulk. Order in multiples of 25.

Low profile JCWCO Truss Head Bolts are provided with all standard 2" deep TUBETRACK® tray fittings. Order additional bolts with nuts and hardware to be used for mounting 1" and 2" deep tray, spares, etc.

Other lengths of Truss Head Bolts may be available upon request.

Hex & Flange Lock Nuts

Nut Size 0.250"

Type	Part No. Zinc Plated Steel	Part No. 18-8 Stainless Steel	Part No. 316 Stainless Steel	Bag Qty.
Hex Nut	HN-ZN-250	HN-SS4-250	HN-SS6-250	25
Locking Flange	HNFL-ZN-250	HNFL-SS4-250	HNFL-SS6-250	

Nut Size 0.375"

Type	Part No. Zinc Plated Steel	Part No. 18-8 Stainless Steel	Part No. 316 Stainless Steel	Bag Qty.
Hex Nut	HN-ZN-375	HN-SS4-375	HN-SS6-375	25
Locking Flange	HNFL-ZN-375	HNFL-SS4-375	HNFL-SS6-375	

Bagged 25 per bag, or shipped in bulk. Order in multiples of 25.

©2021 James C. White Co., Inc. CT2109

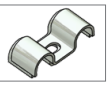

EXAMPLES

Washers

Washer Size 0.250”

Type	Part No. Zinc Plated Steel	Part No. 18-8 Stainless Steel	Part No. 316 Stainless Steel	Bag Qty.
Flat	FLW-ZN-250	FLW-SS4-250	FLW-SS6-250	25
Lock	LKW-ZN-250	LKW-SS4-250	LKW-SS6-250	

Washer Size 0.375”

Type	Part No. Zinc Plated Steel	Part No. 18-8 Stainless Steel	Part No. 316 Stainless Steel	Bag Qty.
Flat	FLW-ZN-375	FLW-SS4-375	FLW-SS6-375	25
Lock	LKW-ZN-375	LKW-SS4-375	LKW-SS6-375	

Bagged 25 per bag, or shipped in bulk. Order in multiples of 25.

Nuts, Specialty
1/4” Dia., 20 NC Thread

Wing

Round

Knurled

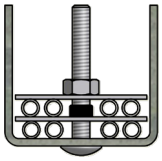

Round Nut holds bolt and lower clamp in place for assembly.

Nut Type	Part No. Zinc Plated Steel	Part No. 18-8 Stainless Steel	Part No. 316 Stainless Steel	Bag Qty.
Wing	WN-ZN-250	WN-SS4-250	WN-SS6-250	25
Round	-	RN-SS4-250	-	
Knurled	KN-ZN-250	-	-	

Round nuts are used to secure bolt or lower layers of tubes as additional layers are added. They are 0.16” high.

All nuts bagged 25 per bag, or shipped in bulk.
Order in multiples of 25.

©2021 James C. White Co., Inc. CT2109

Supplementary Materials

Framing Angle

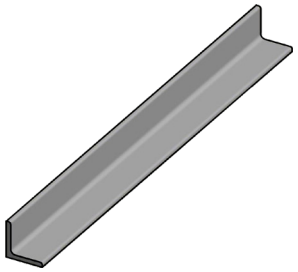

Width	Metal	Part No.
2"	A-36 HRS Hot-Dip Galvanized Steel	A2FR25GCU-240
3"	A-36 HRS Hot-Dip Galvanized Steel	A3FR25GCU-240

1/4" thick, 20' length.
Non-perforated, hot-dip galvanized A-36 HRS structural steel angle for field fabrication.

Standard Strut

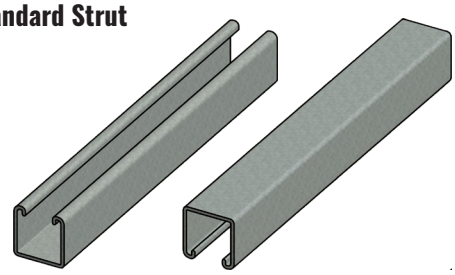

Metal	Part No.	Length
Hot-Dip Galv. Steel	ST200-GC	20'
Pre-Galv. Steel	ST200-PG	
Stainless Steel T-304	ST200-S4	10'
Stainless Steel T-316	ST200-S6	

1-5/8" x 1-5/8" x 12ga.
Standard Strut with no holes.

Strut with Holes

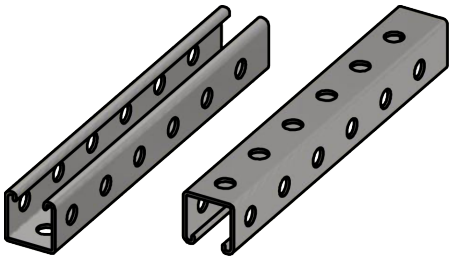

Metal	Part No.	Length
Hot-Dip Galv. Steel	ST200-GC-H3	20'
Pre-Galv. Steel	ST200-PG-H3	

1-5/8" x 1-5/8" x 12ga.
Standard strut with 9/16" round holes (all sides) on 1-7/8" centers.

Will fit JCWCO Strut Connectors & Strut Bases in 90° orientation without drilling holes. See pages 47-48.

Strut with Elongated Holes

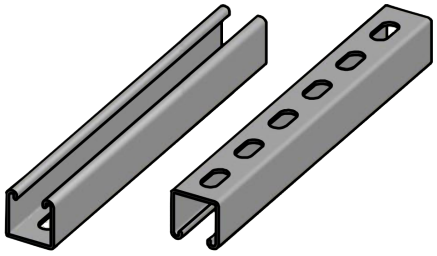

Metal	Part No.	Length
Hot-Dip Galv. Steel	ST200-GC-EH	20'
Pre-Galv. Steel	ST200-PG-EH	
Stainless Steel T-304	ST200-S4-EH	10'
Stainless Steel T-316	ST200-S6-EH	

1-5/8" x 1-5/8" x 12ga.
Standard strut with oblong slots (9/16" x 1-1/8") on 2" centers.

Grating Mounts

Metal	Part No.
Hot-Dip Galv. Steel	IM-GMGC-500X3.0
Stainless Steel T-316	IM-GMS6-500X3.0

1/2" x 3" stud. Withstands up to 1,000 lb. upward pulling force.
Fastener assembly used as a stable base on which to mount other devices to a grating surface.

©2021 James C. White Co., Inc. CT2109

Strut Stand Bases

- Our new Strut Stand Bases allow for fast and easy field fabrication of strut stands, saving you time and money.
- No welds
- Pre-cut or field cut standard strut to desired length.
- Fits Unistrut® P1000, P1000T, P1000H3, standard 1-3/8" x 1-5/8" strut or equivalent.
- Available to purchase as individual components or a complete assembly.
- Assembly includes (2) 1/2-13 x 1 1/2" bolts, (2) 1/2" spring nuts, and angle brace.
- Anchor Fasteners and Strut are not included.

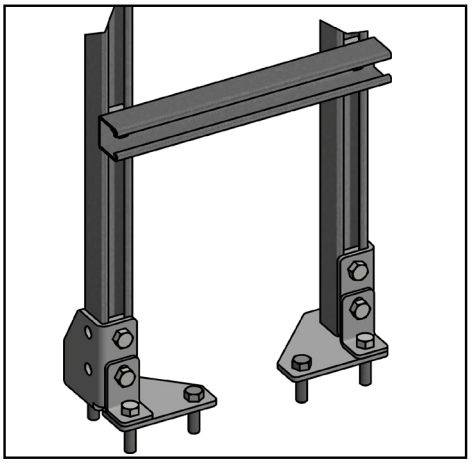

Strut Stand Base Left Hand

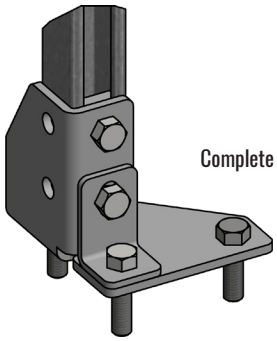

Complete Assembly

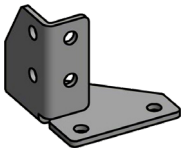

(1) Stand Base

(4) Angle Brace

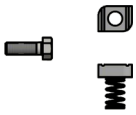

(5) Bolt and
(6) Spring Nut

Metal	Complete Assy. Part No.
Hot-Dip Galv. Steel	STBA-GCL-B2878Y
Stainless Steel T-304	-
Stainless Steel T-316	-

Great for skid building. Can be purchased as individual components or complete assembly. **For Individual Components, use item numbers at left and see page 48 for associated Part Number.**

Complete assembly includes hardware: (2) 1/2-13 x 1-1/2" bolts and (2) 1/2" Spring Nuts. Anchor Fasteners and Strut sold separately.

Strut Stand Base Right Hand

Complete Assembly

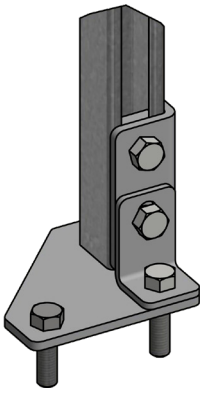

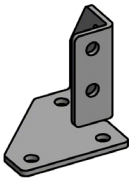

(2) Stand Base

(4) Angle Brace

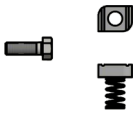

(5) Bolt and
(6) Spring Nut

Metal	Complete Assy. Part No.
Hot-Dip Galv. Steel	STBA-GCR-B2886Y
Stainless Steel T-304	-
Stainless Steel T-316	-

Great for skid building. Can be purchased as individual components or complete assembly. **For Individual Components, use item numbers at left and see page 48 for associated Part Number.**

Complete assembly includes hardware: (2) 1/2-13 x 1-1/2" bolts and (2) 1/2" Spring Nuts. Anchor Fasteners and Strut sold separately.

©2021 James C. White Co., Inc. CT2109

Strut Connector & Stand Base

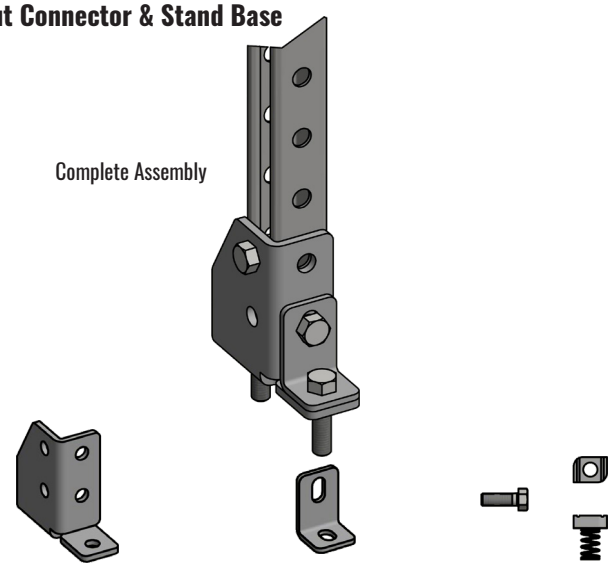

Metal	Complete Assy. Part No.
Hot-Dip Galv. Steel	STBA-GC-A5100Y
Stainless Steel T-304	-
Stainless Steel T-316	-

Great for skid building. Can be purchased as individual components or complete assembly. **For Individual Components, use item numbers at left and see below for associated Part Number.**

Complete assembly includes hardware: (2) 1/2-13 x 1-1/2" bolts and (2) 1/2" Spring Nuts. Anchor Fasteners and Strut sold separately.

Strut Stand Bases - Individual Components

1

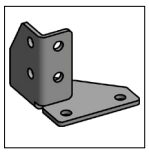

Stand Base - LEFT HAND

Metal	Part No.
Hot-Dip Galv. Steel	STB-GC-B2877-LH
Stainless Steel T-304	-
Stainless Steel T-316	-

2

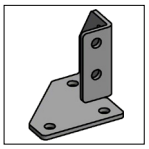

Stand Base - RIGHT HAND

Metal	Part No.
Hot-Dip Galv. Steel	STB-GC-B2885-RH
Stainless Steel T-304	-
Stainless Steel T-316	-

3

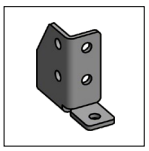

Stand Base - STANDARD

Metal	Part No.
Hot-Dip Galv. Steel	STB-GC-A5099
Stainless Steel T-304	-
Stainless Steel T-316	-

4

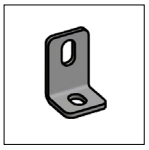

Angle Brace

Metal	Part No.
Hot-Dip Galv. Steel	STBB-GC-A5087
Stainless Steel T-304	-
Stainless Steel T-316	-

5

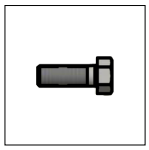

Hex Head Bolt

Metal	Part No.
Zinc-Plated Steel	MBZN-500X1.50

6

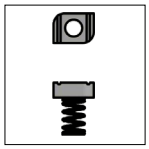

Strut Nut

Metal	Part No. Strut Nut (w/ Spring)	Part No. Strut Nut (No Spring)
Zinc-Plated Steel	STSN-ZN-500	STN-ZN-500
Stainless Steel T-304	STSN-S4-500	STN-S4-500
Stainless Steel T-316	STSN-S6-500	STN-S6-500

Safety-Related options, pg. 2

©2021 James C. White Co., Inc. CT2109

TUBETRACK® Channels:
Complete Support and Protection System for low-voltage control, signal, data, and communications cables.

UL Classification CYNW.E240501

Where TUBETRACK® Channels and Channel Fittings are used as a Ventilated Bottom Channel Cable Tray for the support of low voltage control, signal, data, communications, or other low voltage type cables, the TUBETRACK® Channels and Channel Fittings may be installed per the applicable sections of NEMA Standard VE 2-2000, and NEC-2002 Article 392 for Ventilated Bottom Channel Cable Trays, or per customer's engineering specifications.

Where TUBETRACK® Channels are cut to length in the field, any burr created by the cutting process should be removed before installing the Channel Fitting.

The following table is provided for customer installation information:

TABLE OF CROSS-SECTIONAL AREA OF METAL RATING FOR TUBETRACK® CHANNELS AND CHANNEL FITTINGS CORRESPONDING TO NEC-2002 TABLE 392.7(B)

WIDTH	JCWCO PART NO.	Minimum Cross-Sectional Area of Metal in.² Rating
1	CH1-GC1	0.2
	CH1-NA1	0.2
2	CH2-GC1	0.2
	CH2-NA1	0.2
	CH2-SS1T4-144-6	0.2
	CH2-SS1T6-144-6	0.2
2	CH2-GC2	0.4
	CH2-NA2	0.4
	CH2-SS2T4-144-6	0.2
	CH2-SS2T6-144-6	0.2
4	CH4-GC1	0.2
	CH4-NA1	0.2
	CH4-SS1T4-144-6	0.2
	CH4-SS1T6-144-6	0.2
4	CH4-GC2	0.4
	CH4-NA2	0.4
	CH4-SS2T4-144-6	0.2
	CH4-SS2T6-144-6	0.2
6	CH6-GC1-144	0.4
	CH6-NA1	0.4
	CH6-SS1T4-144-6	0.2
	CH6-SS1T6-144-6	0.2
6	CH6-GC2	0.7
	CH6-NA2	0.7
	CH6-SS2T4-144-6	0.4
	CH6-SS2T6-144-6	0.4

All TUBETRACK® Channel Fittings meet or exceed the minimum cross-sectional area rating of their corresponding Channel Tray listed above. The width of TUBETRACK® Channel Fittings is slightly greater than the corresponding Channel to permit the Channel to bolt inside the fitting. All TUBETRACK® Channel Fittings are supplied with bolting hardware for proper field assembly. Assembly diagrams available on request.

UL® classification of the JCWCO TUBETRACK® system is meant to include the straight lengths of Channel and corresponding Channel Fittings with bolting hardware. Tray Covers, Cover Hold-Down Clamps, Tube and Cable Clamps, non-standard tray or tray components, and other miscellaneous tray accessories are not covered by the UL® classification. UL® classification CYNW.E240501 is for cable tray classified as to its suitability as an equipment grounding conductor only.

©2021 James C. White Co., Inc. CT2109

TUBETRACK® Weights Table

JAMES C. WHITE CO., INC. TUBETRACK® CHANNELS - WEIGHT PER FT. (LB.)					
Depth	**Width**	**Part NO.**	**CARBON STEEL H.D. GALVANIZED AFTER FABRICATION (GC) (LB./FT.)**	**ALUMINUM (NA) (LB./FT.)**	**STAINLESS STEEL 304 & 316 (SS) (LB./FT.)**
Angle					
2	2	A2HD2-**2	1.23	0.46	0.91
Flat					
-	2	F2-**-144	0.73	0.27	0.39
	4	F4-**-144	1.40	0.54	0.75
	6	F6-**-144	2.13	0.82	1.18
Channel					
1	1	CH1-**1	0.76	0.28	(16 ga.) 0.57
	2	CH2-**1	1.04	0.40	(16 ga.) 0.78
	4	CH4-**1	1.52	0.58	(16 ga.) 1.13
	6	CH6-**1	1.98	0.79	(16 ga.) 1.56
2	2	CH2-**2	2.05	0.64	(16 ga.) 1.19
	4	CH4-**2	2.58	0.82	(16 ga.) 1.55
	6	CH6-**2	3.48	1.15	(16 ga.) 1.97

** = GC, NA, or SS

Weight information is also available on the company website (**www.JCWCO.com**) under the "Load & Deflection Information" link. Find and click on the interactive program to also find calculations for span planning of TUBETRACK® structural straight lengths.

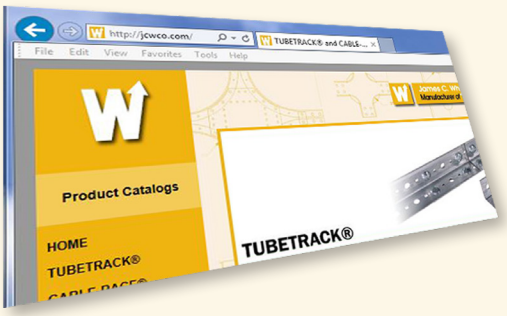

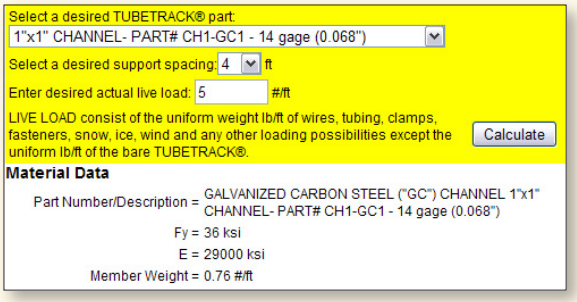

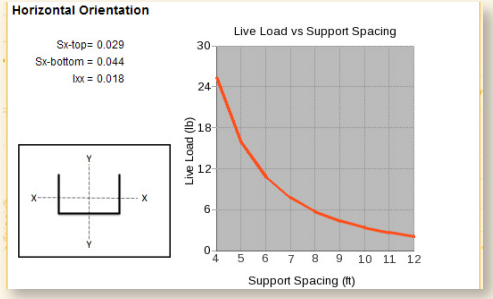

©2021 James C. White Co., Inc. CT2109